File No.	697EK21806	SHEET	1/1

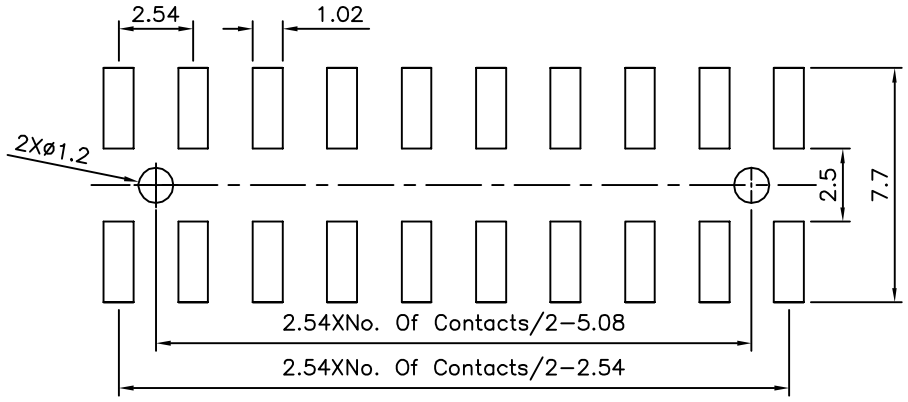

Recommended P.C.B. Layout(Top View)
(PCB Board Tolerance±0.05)

SPECIFICATION

Current Rating:3 Amp
Withstand Voltage:1000V AC
Contact Resistance:20 Milliohms Max.
Insulation Resistance:1000 Megaohms Min.
Operation Temperature:−40°C~+105°C
Contact:Phosphor Bronze,Gold Flash Over Nickel
Insulator:PA6T(UL94V−0),Black
RoHS Compliant

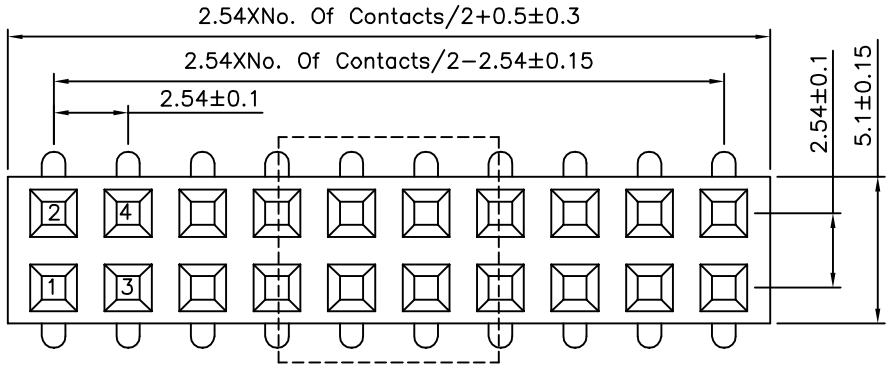

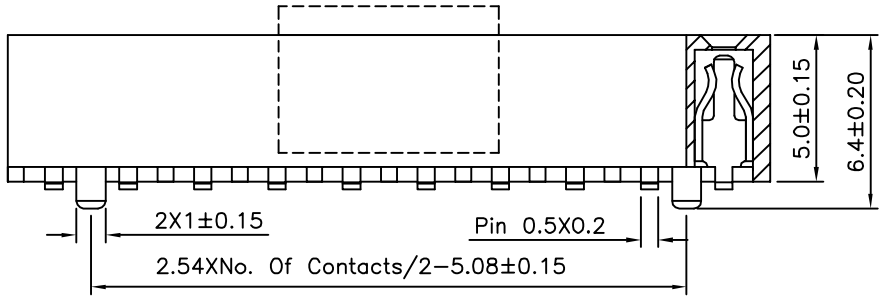

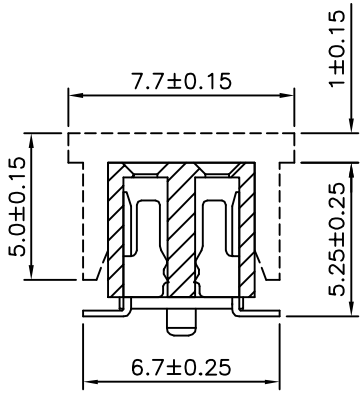

4UCON 元化興業股份有限公司 4UCON TECHNOLOGY INC.

DRAWING No.	APPROVED BY	CHECKED BY	DRAWING BY
21506	EMILY	HZF	CYP
SCALE: NONE	REV.: A0		

UNLESS OTHERWISE SPECIFIED TOLERANCES ARE
X. ±0.25 X.° ±2°
.X ±0.20 .X° ±1.5°
.XX ±0.15 .XX° ±1°
.XXX ±0.10 .XXX° ±0.5°
UNIT mm

NO.	REV.	REVISIONS	CHK	DATE
0	A0	NEW RELEASE	HZF	05/21/2014