File No.	281	SHEET	1/1

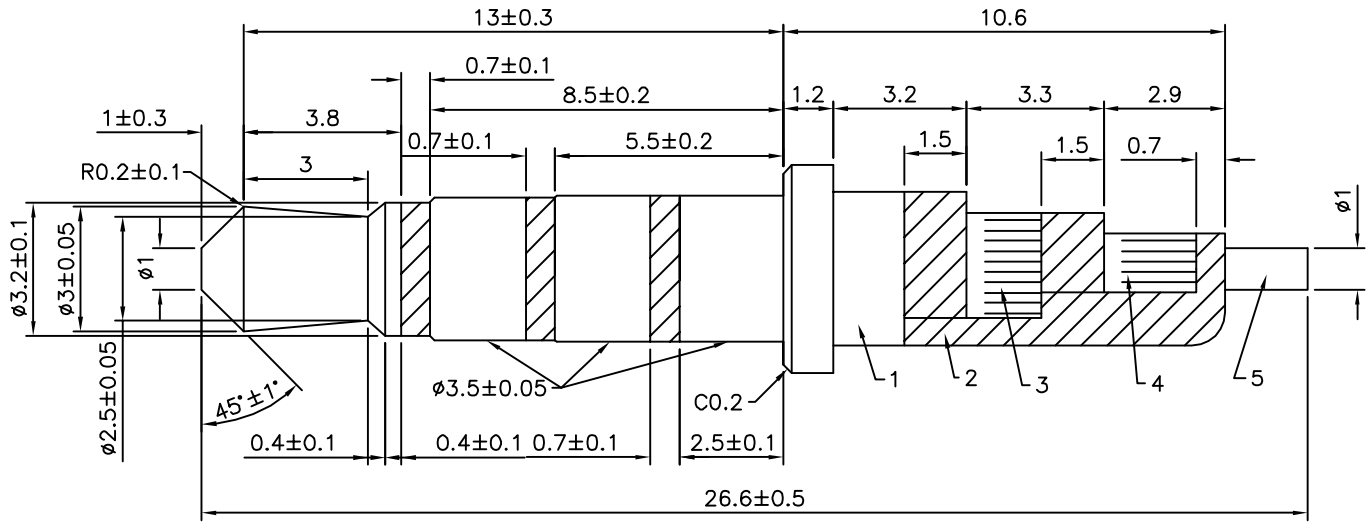

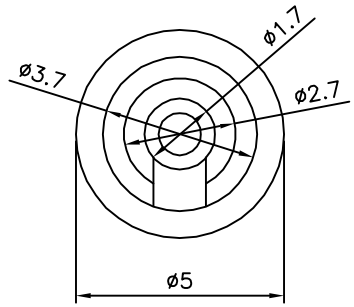

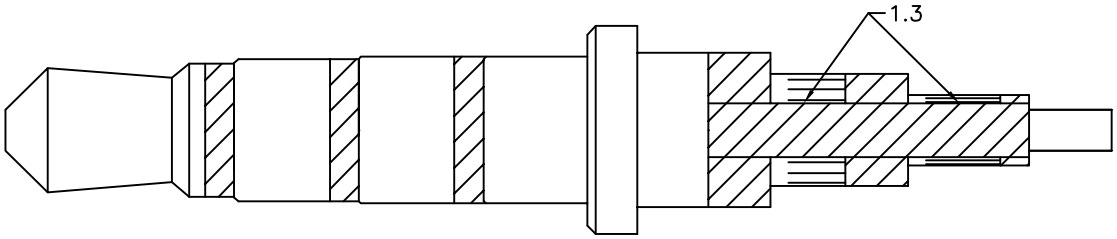

RoHS Compliant

No.	Content
5	Brass Nickel
4	Brass Nickel
3	Brass Nickel
2	Pom Black
1	Brass Nickel

4UCON 元化興業股份有限公司
4UCON TECHNOLOGY INC.

DRAWING No.	APPROVED BY MEI	UNLESS OTHERWISE SPECIFIED TOLERANCES ARE 0~1.0 ±0.1, 1.0~6.0 ±0.2, 6.0~12.0 ±0.3, 12.0~25.0 ±0.4, 25.0~ ±0.5
20138	CHECKED BY HZF	
	DRAWING BY HYY	
SCALE NONE	REV. A0	UNIT mm

NO.	REV.	REVISIONS	CHK	DATE
0	A0	NEW RELEASE	HZF	12/04/2008