File No.	640JK16801	SHEET	1/1

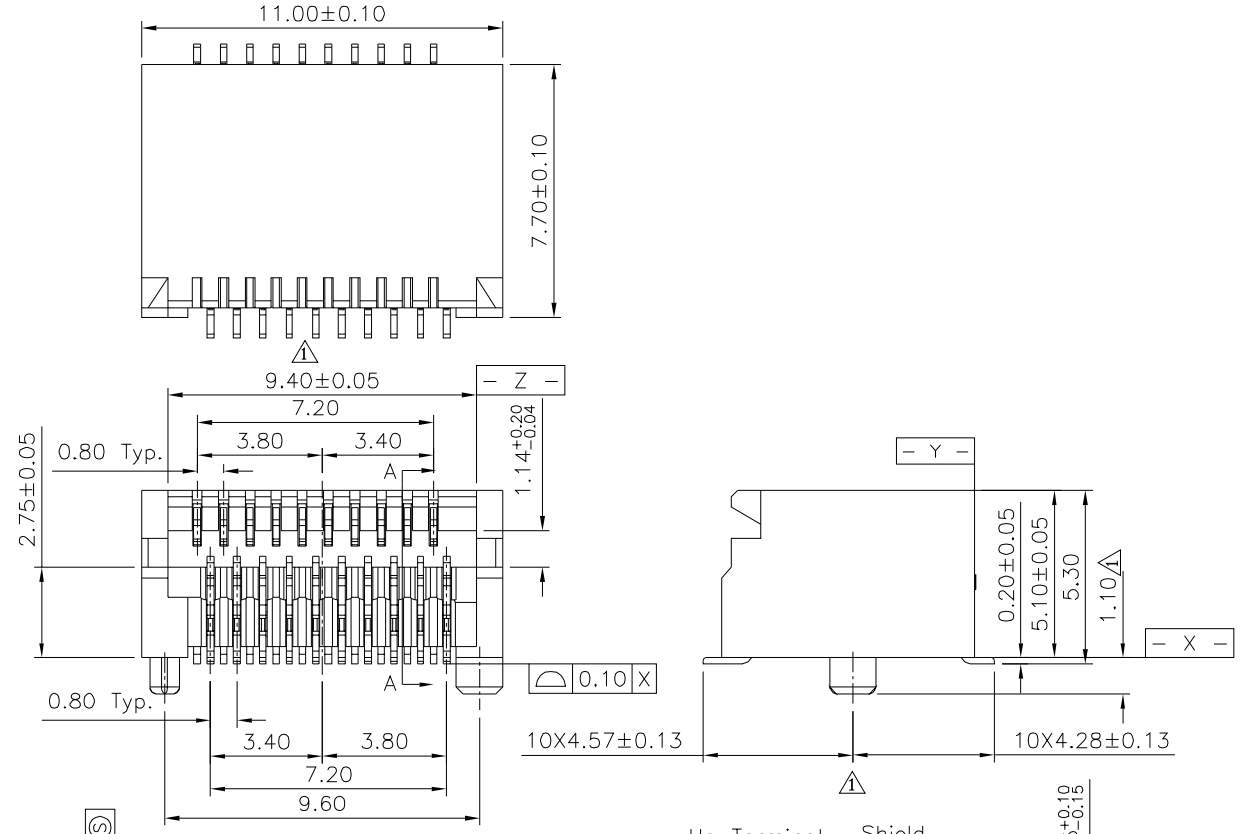

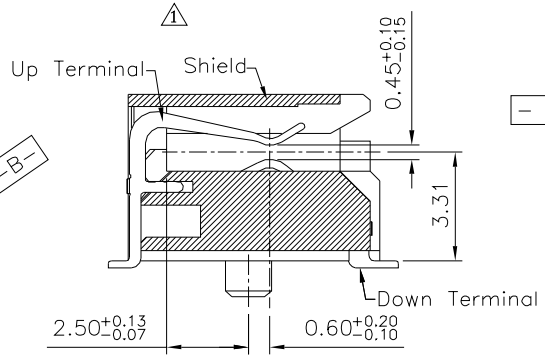

Section A−A

SPECIFICATION

Voltage Rating:120V AC
Current Rating:0.5 A
Withstanding Voltage:300V AC/Minute
Contact Resistance:30 Milliohms Max. Initial
Operation Temperature:−40°C~+85°C
Storage Temperature:−55°C~+105°C
Durability:100 Cycles Min.
Insfrtion And Fxtraction Forcf:40N Max. & 12.5N Max.
Terminal:C5210−EH
Gold Plated 30u" On Contact Area,Tin
Plated On Solder Tails,Over Nickel
Housing:LCP(UL94V−0),Black
Reflow Soldering Temperature:255~265° Max. For 5~10 Seconds.
RoHS Compliant

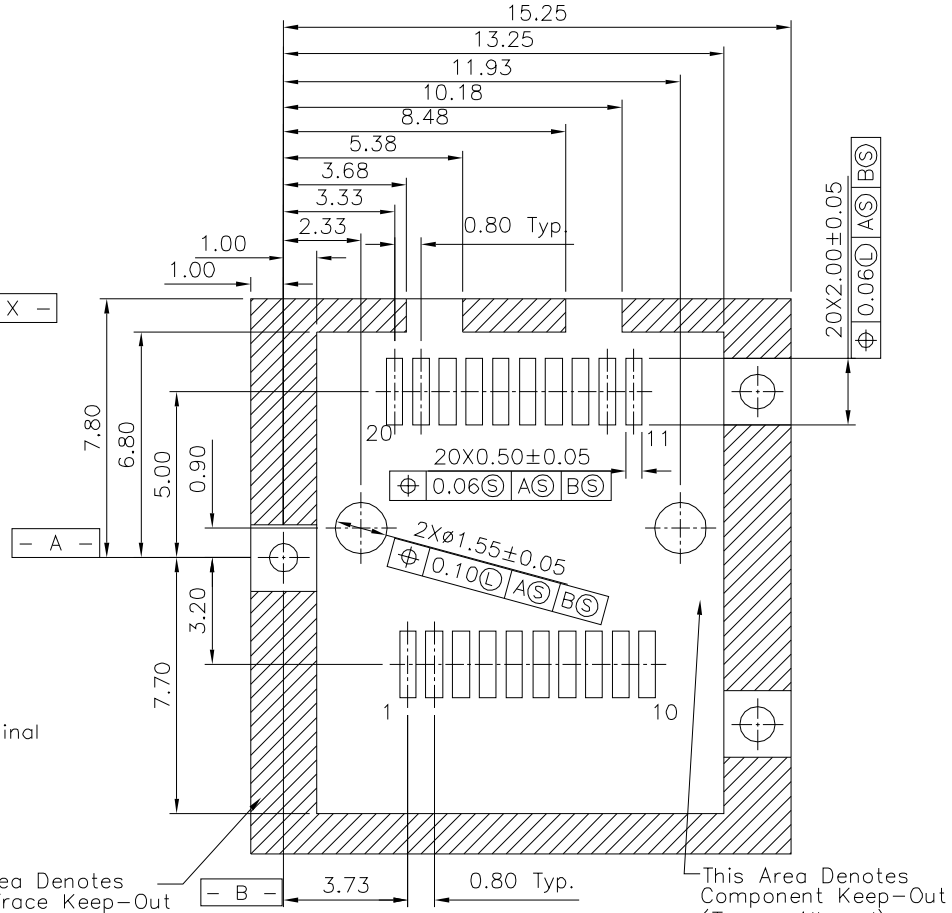

Recommended P.C.B. Layout

4UCON 元化興業股份有限公司 4UCON TECHNOLOGY INC.

DRAWING No.	APPROVED BY	MEI	UNLESS OTHERWISE SPECIFIED TOLERANCES ARE
19128	CHECKED BY	HZF	X. ±0.25 X°. ±2.00° .X ±0.20 .X° ±1.00° .XX ±0.10 .XX° ±0.50° .XXX ±0.05 .XXX° ±0.10°
	DRAWING BY	CYP	
SCALE NONE	REV.	A1	UNIT mm

NO.	REV.	REVISIONS	CHK	DATE
1	A1	Modify Data	HZF	11/16/2019
0	A0	NEW RELEASE	HZF	12/13/2016