File No.	439NH24801	SHEET	1/1

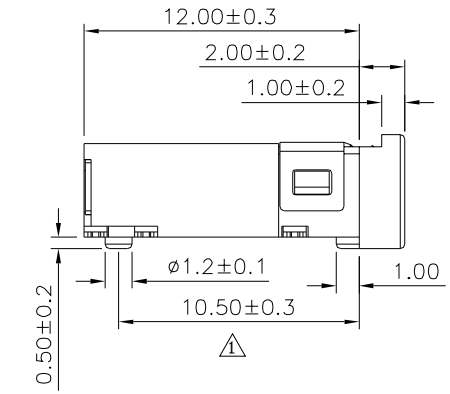

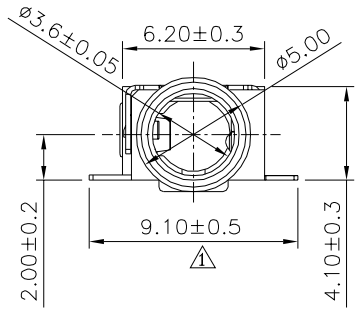

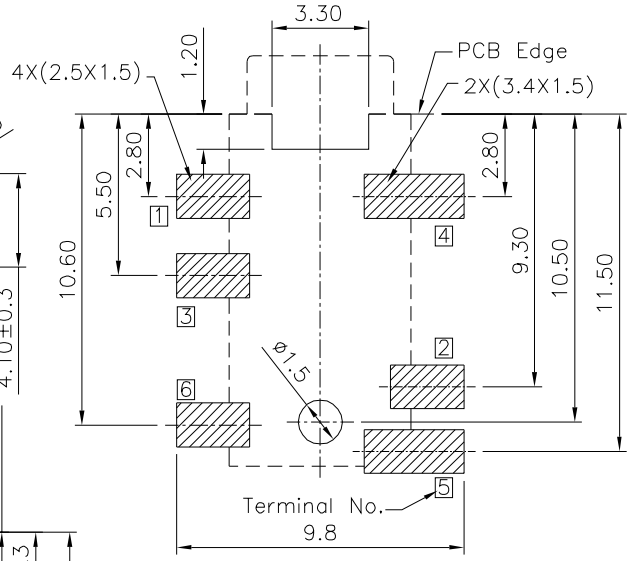

Recommended P.C.B. Layout(Top View)
(PCB Board Tolerance±0.05)

1 SPECIFICATION
Rating:DC 30V 0.5A
Withstand Voltage:500V AC
Contact Resistance:30 Milliohms Max.
After Teset:50 Milliohms Max.
Insulation Resistance:100 Megaohms Min.(DC 500V)
After Test:50 Megaohms Min.
Insertion And Extraction Force:3~30N
Operation Temperature:−20°C~+70°C
RoHS Compliant

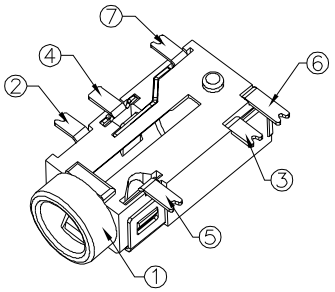

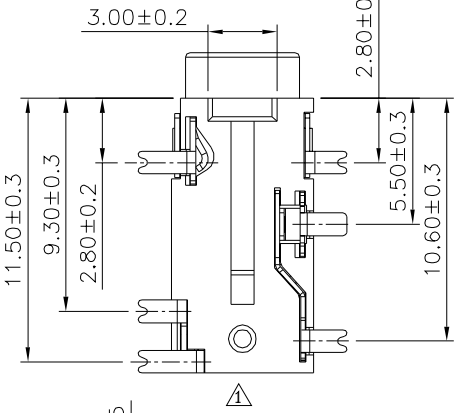

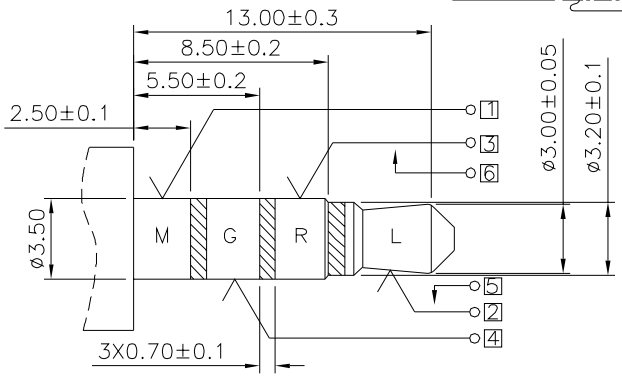

Recommended Plug
2 1 ø3.5 4−Pole Standard Plug

No.	Description	Q'ty	Material	Remark
2 1 ⑦	Shunt Terminal 6	1	Phosphor Bronze	Gold Plated Over Nickel
⑥	Shunt Terminal 5	1	Brass	Gold Plated Over Nickel
⑤	Ring Spring 4	1	Phosphor Bronze	Gold Plated Over Nickel
④	Ring Spring 3	1	BeCu	Gold Plated Over Nickel
③	Tip Spring 2	1	BeCu	Gold Plated Over Nickel
②	Earth Spring 1	1	Phosphor Bronze	Gold Plated Over Nickel
①	Housing	1	PA10T,UL94V−0	Black

1

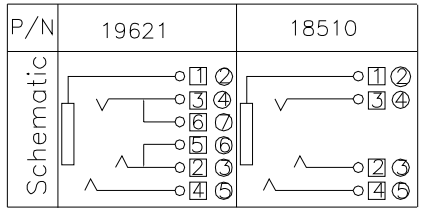

Circuit Diagram □:Terminal No. ○:Item No.

4UCON 元化興業股份有限公司 4UCON TECHNOLOGY INC.

DRAWING No. 0	APPROVED BY MEI	UNLESS OTHERWISE SPECIFIED TOLERANCES ARE
18510	CHECKED BY HZF	.X ±0.38 X.° ±5° .XX ±0.30 .X° ±3° .XXX ±0.15 .XX° ±2°
	DRAWING BY CYP	
SCALE NONE	REV. B2	UNIT mm

NO.	REV.	REVISIONS	CHK	DATE
2	B2	Modify Data	HZF	08/24/2023
1	B1	Modify Data	HZF	06/04/2021
0	B0	Modify Data	HZF	10/22/2018
0	B0	NEW RELEASE	HZF	10/22/2018