File No.	373IA16217	SHEET	1/1

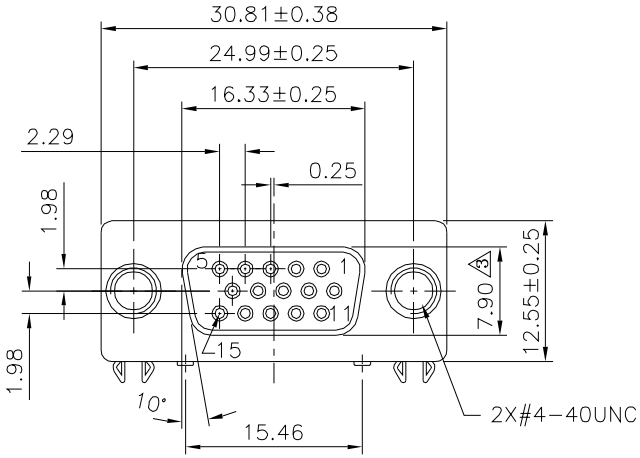

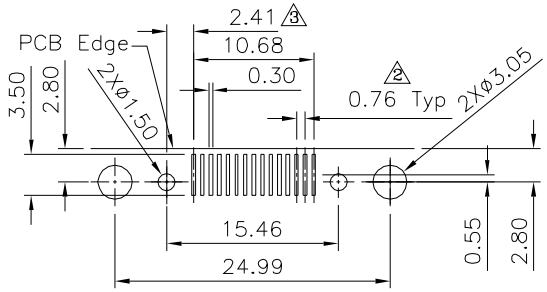

Pin Number:
6 11 1 7 12 2 8 13 3 9 14 4 10 15 5

Recommended P.C.B. Layout(Top View)
PCB Thickness=1.60±0.05mm(Tolerances±0.05)

SPECIFICATION
Current Rating:1.0A DC
Voltage Rating:300V DC Max.
Withstand Voltage:500V AC For 1 Minute
Contact Resistance:30 Milliohms Max.(Initial)
Insulation Resistance:1000 Megaohms Min.
Operation Temperature:-55°C~+85°C
Durability:1000 Mating Cycles
Housing:PA6T+30%G.F.(UL94V-0),Black
Terminal:Phosphor Bronze
Gold Flash On Contact Area,Tin Plated
On Solder Tails,Over Nickel
Boardlock:Brass,Tin Plated
Nut:Brass,Nickel Plated
Shell:SPCC,Nickel Plated Over Copper
RoHS Compliant

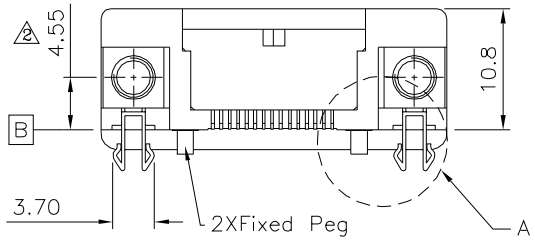

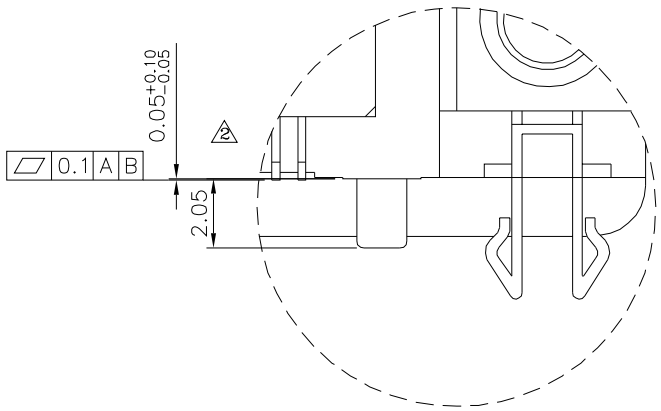

Detail A

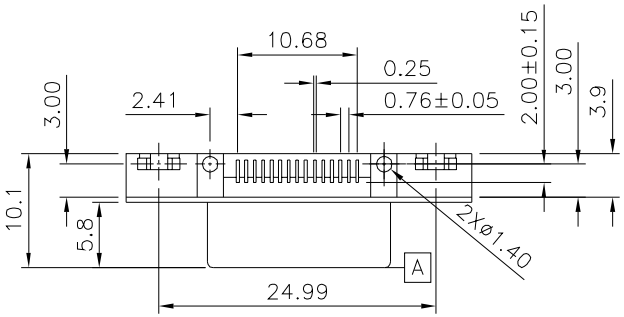

4UCON 元化興業股份有限公司 4UCON TECHNOLOGY INC.	DRAWING No. 09766	APPROVED BY MEI	UNLESS OTHERWISE SPECIFIED TOLERANCES ARE .X ±0.30 .XX ±0.20 .XXX ±0.10 ANG. ±3°		
		CHECKED BY HZF			
		DRAWING BY CYP			
	SCALE NONE	REV. A3	UNIT mm		

NO.	REV.	REVISIONS	CHK	DATE
3	A3	Modify Data	HZF	01/16/2018
2	A2	Modify Data	HZF	09/11/2012
1	A1	Modify Data	HZF	10/28/2009
0	A0	NEW RELEASE	HZF	09/21/2008