File No.	255	SHEET	1/1

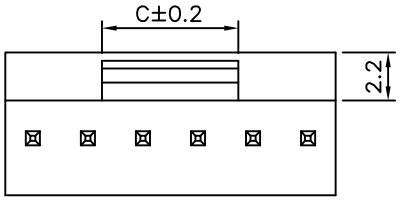

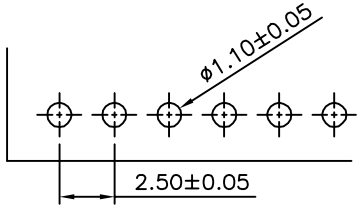

P.C.B Layout

1 SPECIFICATION

Insulator:PBT+30%G.F.(UL94V-0)
Contact:Brass,Tin Plated Over Nickel
RoHS Compliant

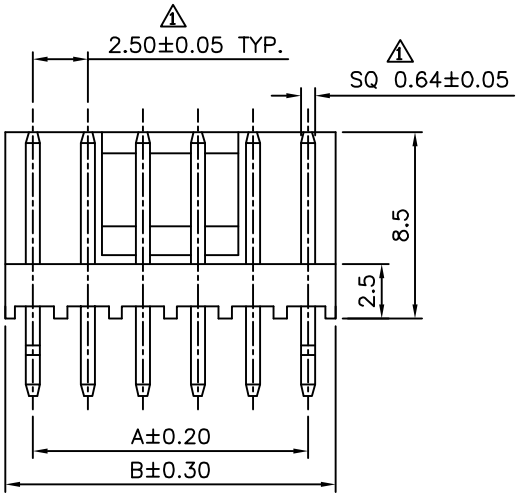

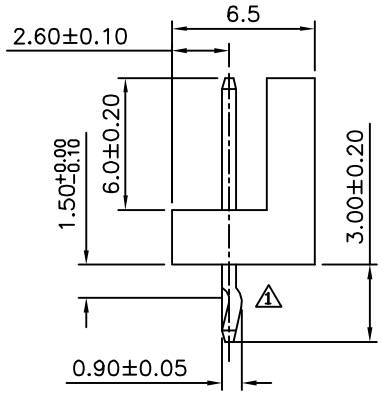

Pin	A	B	C
2	2.5	5.0	2.2
3	5.0	7.5	2.7
4	7.5	10.0	5.2
5	10.0	12.5	5.2
6	12.5	15.0	6.2
7	15.0	17.5	8.2
8	17.5	20.0	10.2
9	20.0	22.5	10.2
10	22.5	25.0	10.2
11	25.0	27.5	11.2
12	27.5	30.0	11.2
13	30.0	32.5	13.2
14	32.5	35.0	13.2

4UCON 元化興業股份有限公司
4UCON TECHNOLOGY INC.

DRAWING No.	APPROVED BY MEI	UNLESS OTHERWISE SPECIFIED TOLERANCES ARE
09640	CHECKED BY HZF	.X ±0.25
	DRAWING BY HTP	.XX ±0.15
		.XXX ±0.08
SCALE NONE	REV. A1	UNIT mm

NO.	REV.	REVISIONS	CHK	DATE
1	A1	Modify Data	HZF	03/09/2012
0	A0	NEW RELEASE		