| File No. | 227MB11227 | SHEET | 1 /1 |
|---|---|---|---|

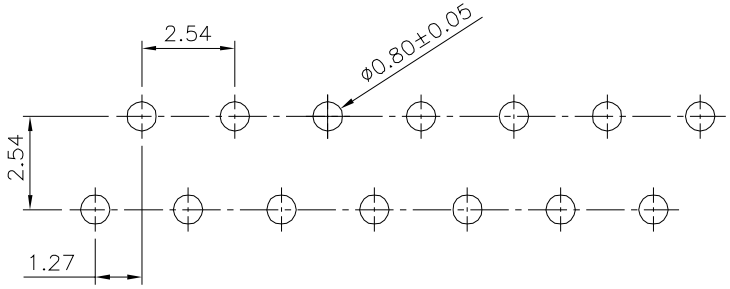


Recommended P.C.B. Layout

## SPECIFICATION

Current Rating:1.0A AC/DC
Voltage Rating:30V AC/DC
Contact Resistance:20 Milliohms Max.
Insulation Resistance:1000 Megaohms Min.
Withstanding Voltage:500V AC/Minute
Operation Temperature Range:−40°C~+105°C
3 2 Insulator:PA9T(UL94V−0),Red
Contact:Phosphor Bronze,Tin Plated
RoHS Complant

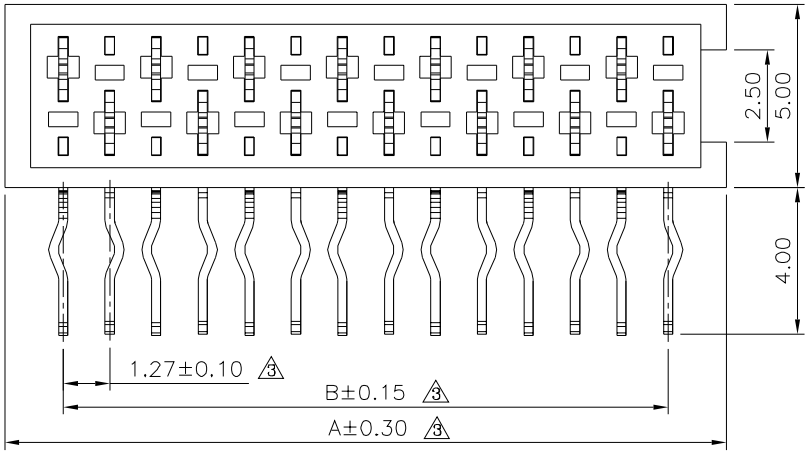


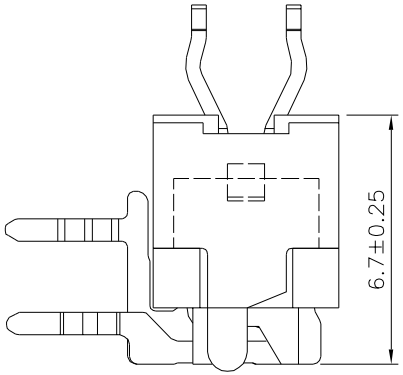


3 Mating Height Draw.

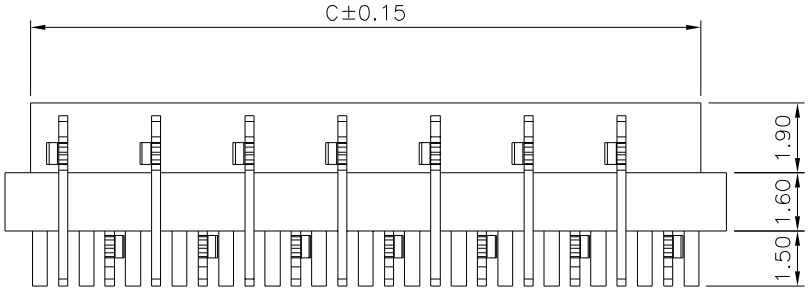


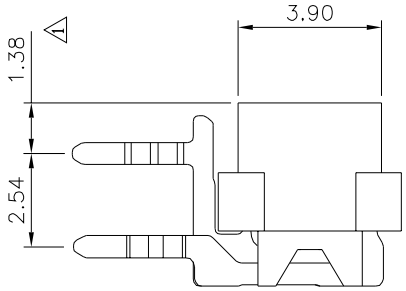


1

| Pin | A | B | C |
|---|---|---|---|
| 04 | 7.00 | 3.81 | 5.60 |
| 06 | 9.54 | 6.35 | 8.14 |
| 08 | 12.08 | 8.89 | 10.68 |
| 10 | 14.62 | 11.43 | 13.22 |
| 12 | 17.16 | 13.97 | 15.76 |
| 14 | 19.70 | 16.51 | 18.30 |
| 16 | 22.24 | 19.05 | 20.84 |
| 18 | 24.78 | 21.59 | 23.38 |
| 20 | 27.32 | 24.13 | 25.92 |
| 22 | 29.86 | 26.67 | 28.46 |
| 24 | 32.40 | 29.21 | 31.00 |
| 26 | 34.94 | 31.75 | 33.54 |

4UCON 元化興業股份有限公司 4UCON TECHNOLOGY INC.

| DRAWING No. 2 3 | APPROVED BY EMILY | UNLESS OTHERWISE SPECIFIED TOLERANCES ARE |
|---|---|---|
| 09258 | CHECKED BY HZF | .X ±0.20 |
| | DRAWING BY WSS | .XX ±0.15 |
| | | ANG. |
| SCALE NONE | REV. A3 | UNIT mm |

| NO. | REV. | REVISIONS | CHK | DATE |
|---|---|---|---|---|
| 3 | A3 | Modify Data | HZF | 02/11/2022 |
| 2 | A2 | Modify Data | HZF | 03/21/2011 |
| 1 | A1 | Modify Data | HZF | 06/09/2010 |
| 0 | A0 | NEW RELEASE | BECKY | 02/15/2005 |