File No.	353IG25233	SHEET 1 / 1

△2△1 SPECIFICATION
Insulator:ABS(UL94HB),Chromate Plated
Screw,Nut&SR:Steel,Nickel Plated
Packing:One Bag/Set
RoHS Compliant

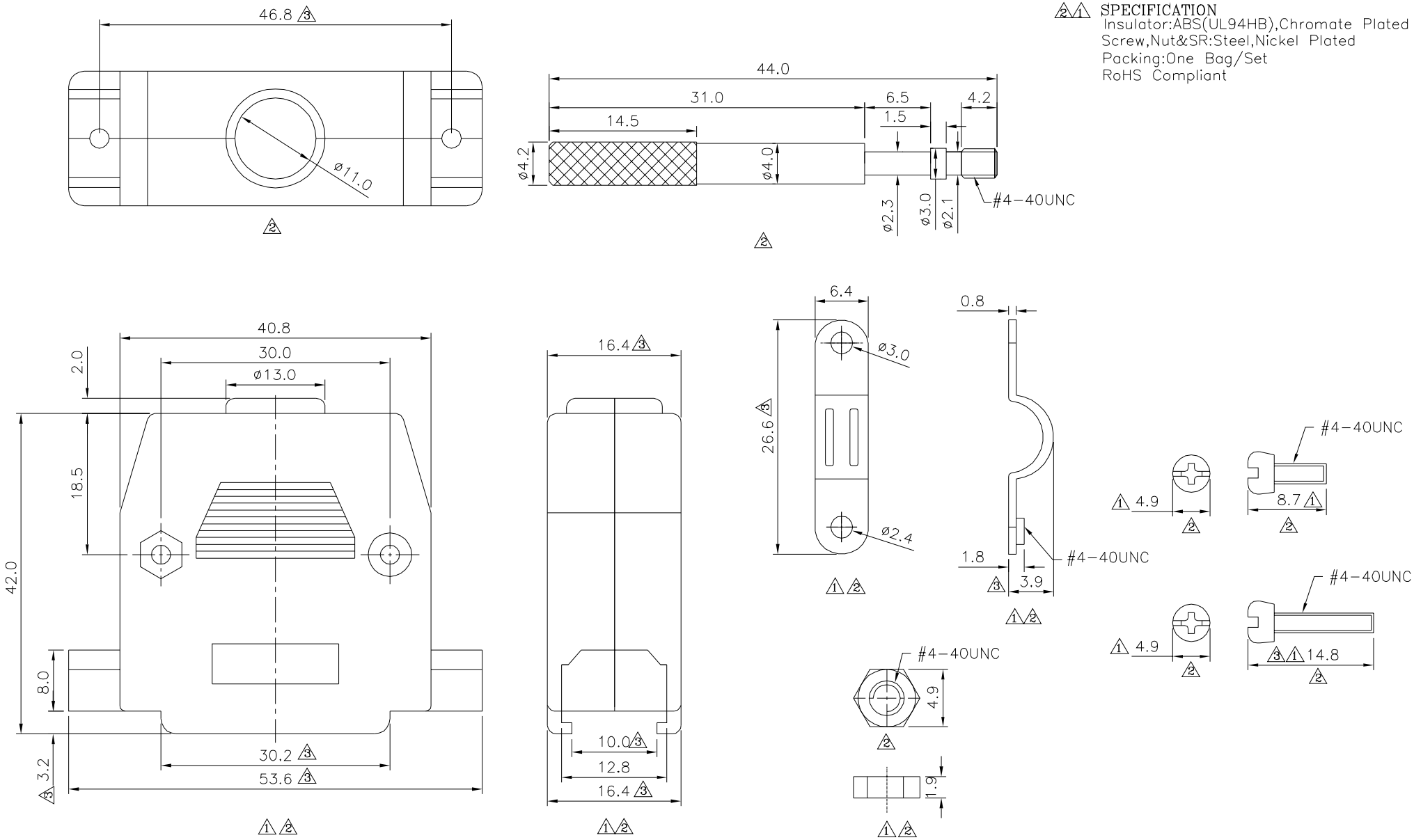

4UCON 元化興業股份有限公司 4UCON TECHNOLOGY INC.	DRAWING No. △2 03167	APPROVED BY MEI	UNLESS OTHERWISE SPECIFIED TOLERANCES ARE △1△2 X. ±0.3 △3 .X ±0.3 .XX ±0.2 ANG. ±5°	△3	A3	Modify Data	HZF	07/25/2018
		CHECKED BY HZF		△2	A2	Modify Data	HZF	09/25/2014
		DRAWING BY HAO		△1	A1	Modify Data	HZF	01/12/2010
	SCALE NONE	REV. A3	UNIT mm	△0	A0	NEW RELEASE	HZF	05/07/2008
				NO.	REV.	REVISIONS	CHK	DATE