File No.	030GI23217	SHEET	1/1

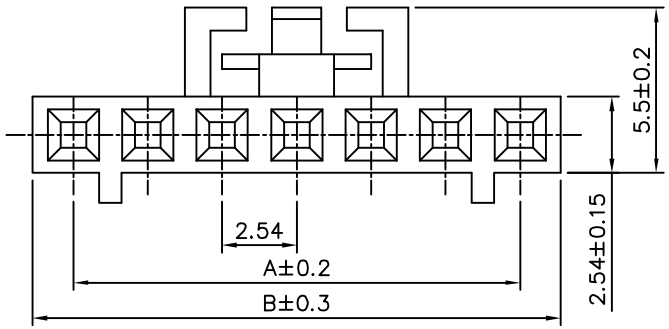

Latch And Polarization RIB Location

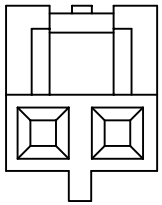

2 Circuit

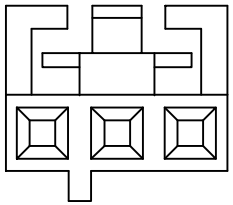

3 Circuit

SPECIFICATION

Current Rating:2.5A AC/DC
Voltage Rating:250V AC/DC
Withstand Voltage:800V AC/Minute
Insulation Resistance:1000 Megaohms Min.
Temperature Range:−25°C~+85°C
Insulator:PBT(UL94V−0),Black
RoHS Compliant

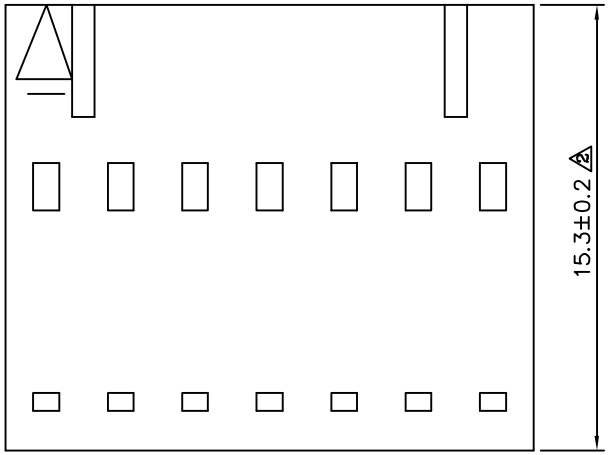

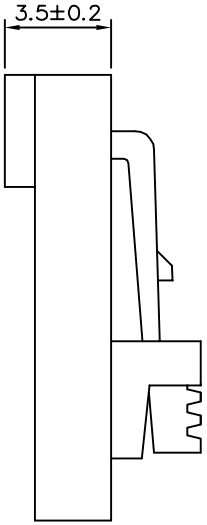

Circuits	A	B
02	2.54	5.35
03	5.08	7.89
04	7.62	10.43
05	10.16	12.97
06	12.70	15.51
07	15.24	18.05
08	17.78	20.59
09	20.32	23.13
10	22.86	25.67
11	25.40	28.21
12	27.94	30.75
13	30.48	33.29
14	33.02	35.83
15	35.54	38.37
16	38.10	40.91
17	40.64	43.45
18	43.18	45.99

4UCON 元化興業股份有限公司 4UCON TECHNOLOGY INC.

DRAWING No.	APPROVED BY MEI	UNLESS OTHERWISE SPECIFIED TOLERANCES ARE
01998	CHECKED BY HZF	X. ±0.5 .X ±0.25 .XX ±0.2 .XXX ±0.08
	DRAWING BY CYP	
SCALE NONE	REV. B2	UNIT mm

NO.	REV.	REVISIONS	CHK	DATE
2	B2	Modify Data	HZF	09/23/2016
1	B1	Modify Data	HZF	03/03/2010
0	B0	NEW RELEASE	BECKY	06/07/2006