File No.	037QA06806	SHEET	1/1

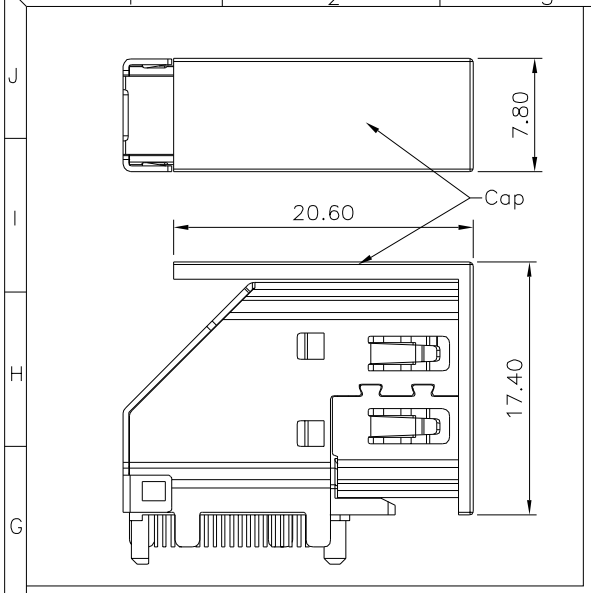

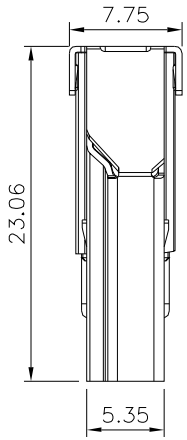

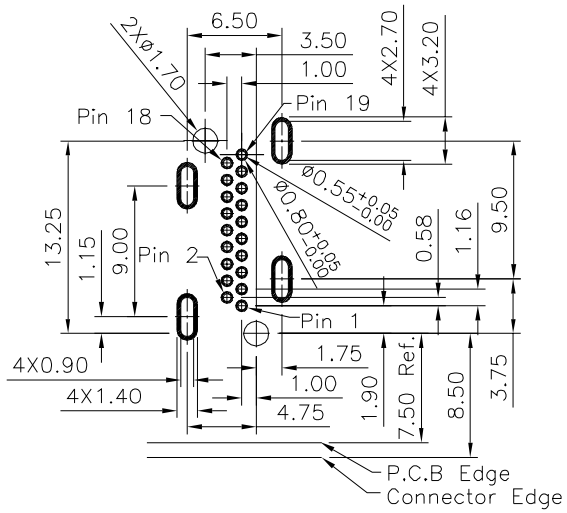

Recommended P.C.B. Layout(Top View)
(PCB Board Tolerance±0.05)

SPECIFICATION

Current Rating:0.5A
Voltage Rating:40V
Contact Resistance:30 Milliohms Max.
Insulation Resistance:100 Megaohms Min. At 500V DC
Dielectnc Withstand Voltage:500V AC For 1 Minute
Insertion Force:4.5Kgf Max.
Withdrawal Force:1Kgf~4Kgf.
Life Test:10000 Cycles.
Operation Temperature:−25°C~+85°C
Housing:LCP,(UL94V−0)
Terminal:Brass,Gold Flash On Contact Area,Tin Plated On Solder Tails,Over Nickel
Shell:Brass,Nickel Plated Over All
RoHS Compliant

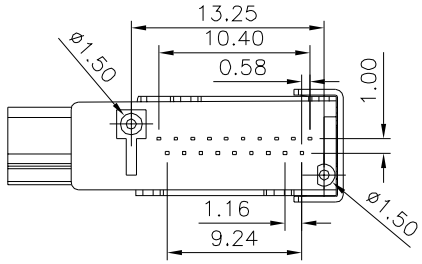

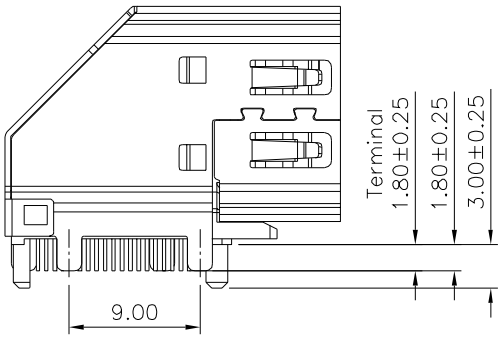

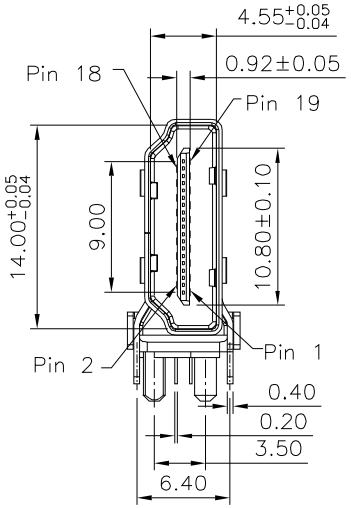

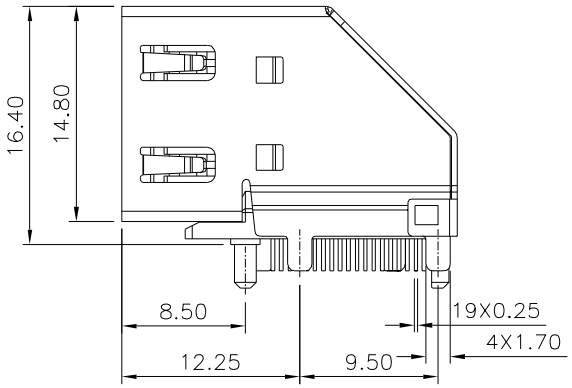

4UCON 元化興業股份有限公司
4UCON TECHNOLOGY INC.

DRAWING No.	APPROVED BY	UNLESS OTHERWISE SPECIFIED TOLERANCES ARE
23017	MEI	.X ±0.35
	CHECKED BY HZF	.XX ±0.25
	DRAWING BY CYP	.XXX ±0.15
SCALE NONE	REV. A1	ANG. ±3°
		UNIT mm

NO.	REV.	REVISIONS	CHK	DATE
1	A1	Modify Data	HZF	01/06/2026
0	A0	NEW RELEASE	HZF	05/25/2025