| File No. | 697QG27803 | SHEET | 1/1 |
|---|---|---|---|

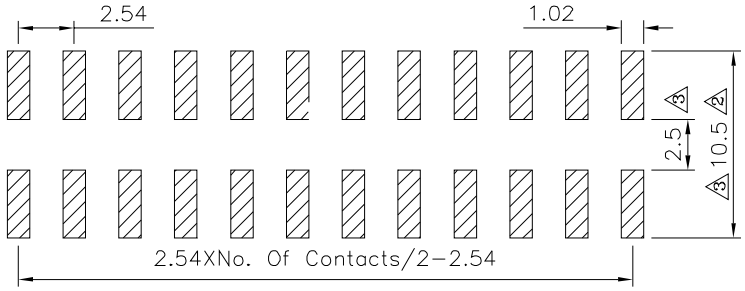


1 Recommended P.C.B. Layout
PCB Tolerance:±0.05 (Top View)

**SPECIFICATION**

Current Rating:3A
1 Withstand Voltage:1000V AC Min./Minute
Contact Resistance:20 Milliohms Max.
Insulation Resistance:1000 Megaohms Min.
Operation Temperature:−40°C~+105°C
2 Insulator:PA9T(UL94V−0),Black
Contact:Brass,Gold Flash Over Nickel
RoHS Compliant

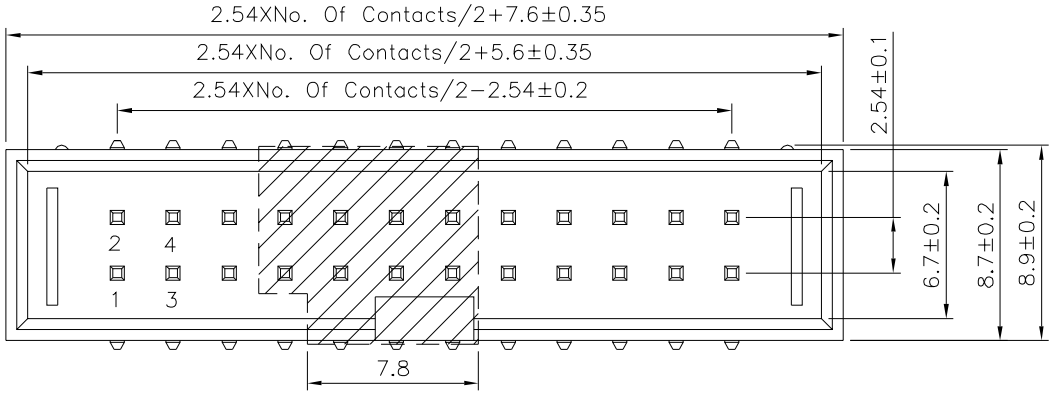


1 2 3

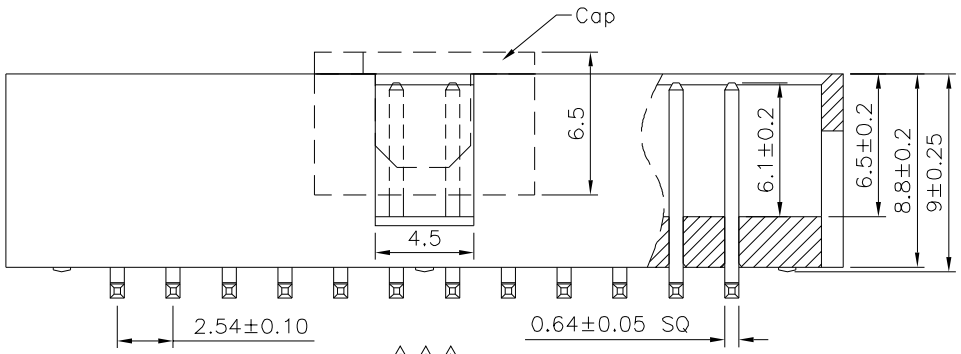


3 2 1

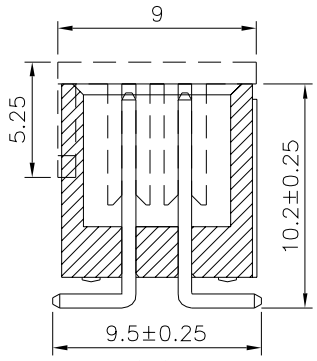


3 2

4UCON 元化興業股份有限公司
4UCON TECHNOLOGY INC.

| DRAWING No. | APPROVED BY Jason Wu | UNLESS OTHERWISE SPECIFIED TOLERANCES ARE 3 |
|---|---|---|
| 22484 | CHECKED BY Leo Han | X. ±0.30 X.° ±2° .X ±0.25 .X° ±1.5° .XX ±0.20 .XX° ±1.0° .XXX ±0.15 .XXX° ±0.5° |
| | DRAWING BY Michelle Lee | |
| SCALE NONE | REV. A3 | UNIT mm |

| NO. | REV. | REVISIONS | CHK | DATE |
|---|---|---|---|---|
| 3 | A3 | Modify Data | HZF | 06/27/2026 |
| 2 | A2 | Modify Data | HZF | 05/30/2023 |
| 1 | A1 | Modify Data | HZF | 01/14/2019 |
| 0 | A0 | NEW RELEASE | HZF | 11/27/2015 |