File No.	6970D06806	SHEET	1/1

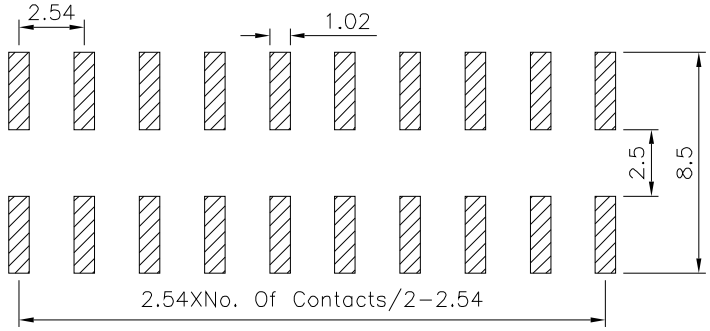

Recommended P.C.B. Layout(Top View)
(PCB Board Tolerance±0.05)

SPECIFICATION

Current Rating: 3A
△1 Withstand Voltage: 1000V AC Min./Minute
Contact Resistance: 20 Milliohms Max.
Insulation Resistance: 1000 Megaohms Min.
Operation Temperature: −40°C~+105°C
△2 Housing: PA9T(UL94V−0),Black
Contact: Brass,Gold Flash Over Nickel
RoHS Compliant

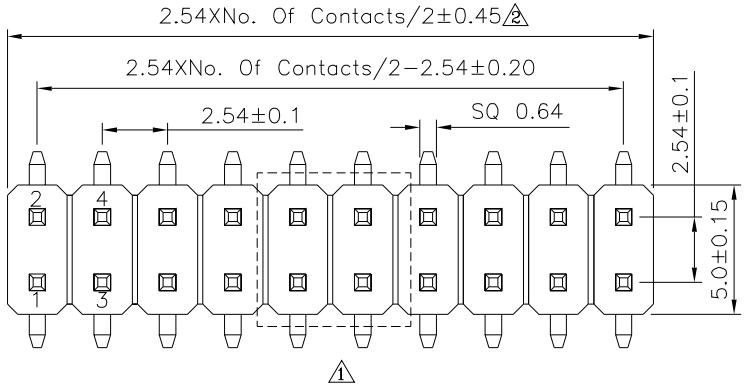

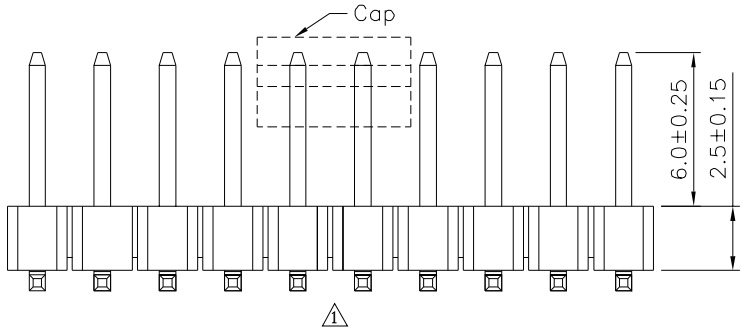

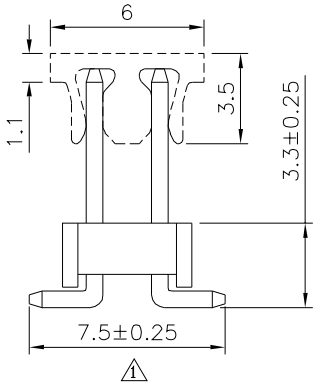

4UCON 元化興業股份有限公司
4UCON TECHNOLOGY INC.

DRAWING No.	APPROVED BY MEI	UNLESS OTHERWISE SPECIFIED TOLERANCES ARE △2
21803	CHECKED BY HZF	X. ±0.30 X.° ±2° .X ±0.25 .X° ±1.5° .XX ±0.20 .XX° ±1° .XXX ±0.15 .XXX° ±0.5°
	DRAWING BY CYP	
SCALE NONE	REV. A2	UNIT mm

NO.	REV.	REVISIONS	CHK	DATE
△2	A2	Modify Data	HZF	04/06/2024
△1	A1	Modify Data	HZF	09/30/2016
△0	A0	NEW RELEASE	HZF	01/03/2014