File No.	561EJ14803	SHEET	1/1

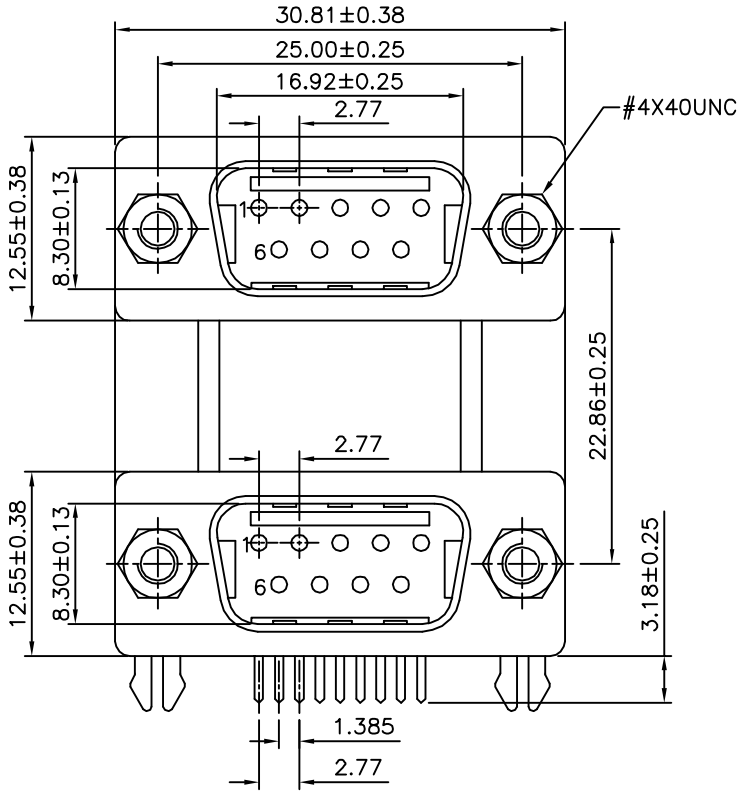

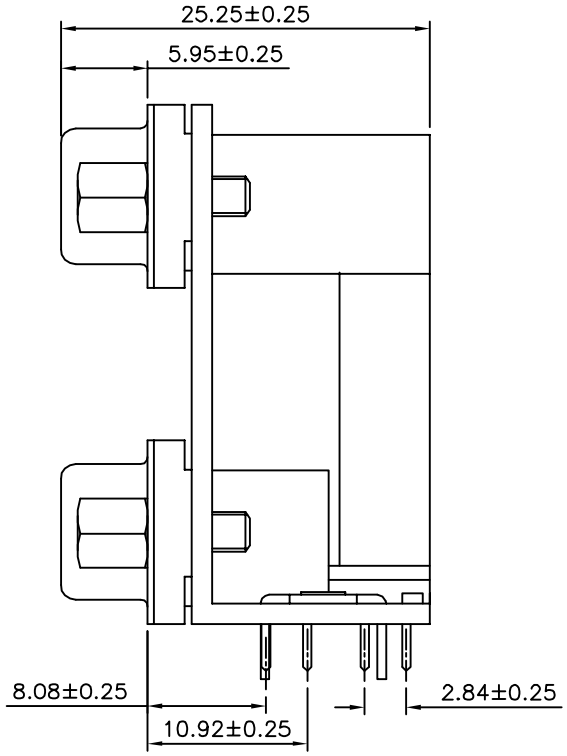

SPECIFICATION

Current Rating:1.0 Amp
Dielectric Withstanding Voltage:1000V AC Min.
Contact Resistance:30 Milliohms Max.
Insulation Resistance:5000 Megaohms Min.
Temperature Range:−55°C~+105°C
Contact:Brass,Gold Flash On Contact Area,
Tin Plated On Solder Tails,Over Nickel
Insulator:PBT+30%G.F.(UL94V−0),Black
Shell:Steel,Nickel Plated
Grounding Bracket:Zinc Alloy,Nickel Plated
Boardlock:Copper Alloy,Tin Plated
Screw:12L14,Nickel Plated
RoHS Compliant

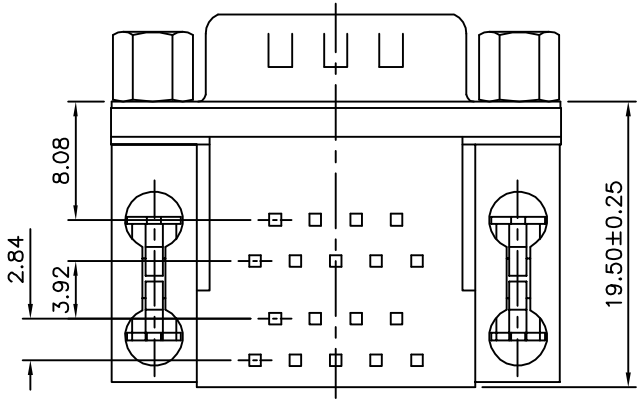

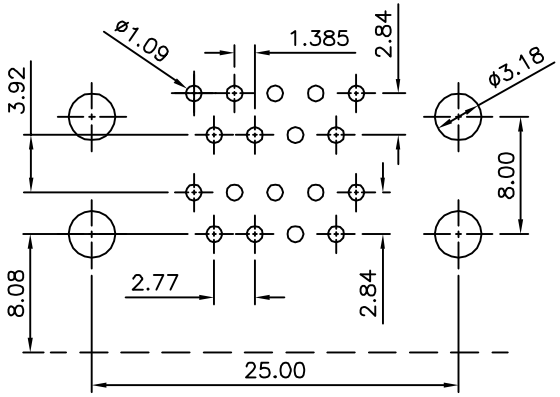

Recommended P.C.B. Layout

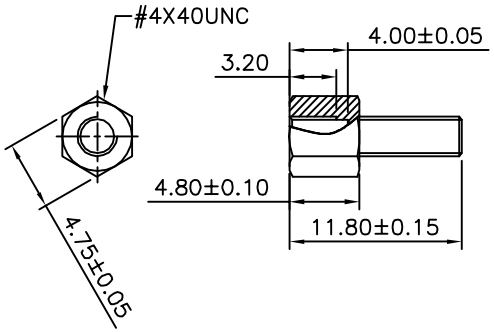

4UCON 元化興業股份有限公司 4UCON TECHNOLOGY INC.

DRAWING No.	APPROVED BY EMILY	UNLESS OTHERWISE SPECIFIED TOLERANCES ARE
20585	CHECKED BY HZF	.X ±0.25 .X° ±3° .XX ±0.15 .XX° ±1° .XXX ±0.05 .XXX° ±0.5°
	DRAWING BY CYP	
SCALE NONE	REV. A0	UNIT mm

NO.	REV.	REVISIONS	CHK	DATE
0	A0	NEW RELEASE	HZF	04/14/2014