File No.	697FD17806	SHEET	1/1

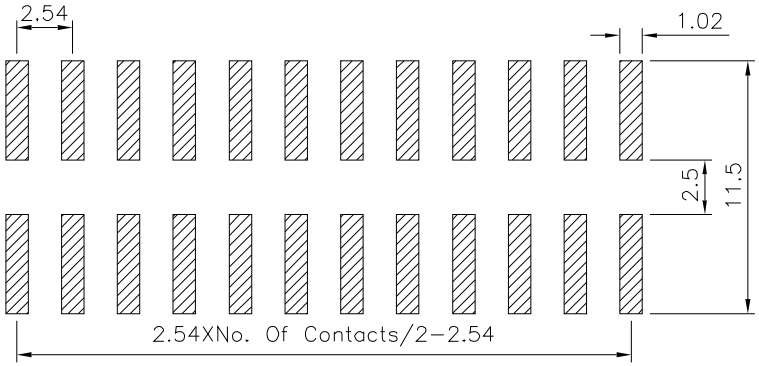

3 1 Recommended P.C.B. Layout
PCB Tolerance:±0.05 (Top View)

1 SPECIFICATION
Current Rating:3 Amps
Withstand Voltage:1000V AC
Contact Resistance:20 Milliohms Max.
Insulation Resistance:1000 Megaohms Min.
Operation Temperature:−40°C~+105°C
Insulator:PA6T(UL94V−0),Black
Contact:Brass,Gold Flash Over Nickel
RoHS Compliant

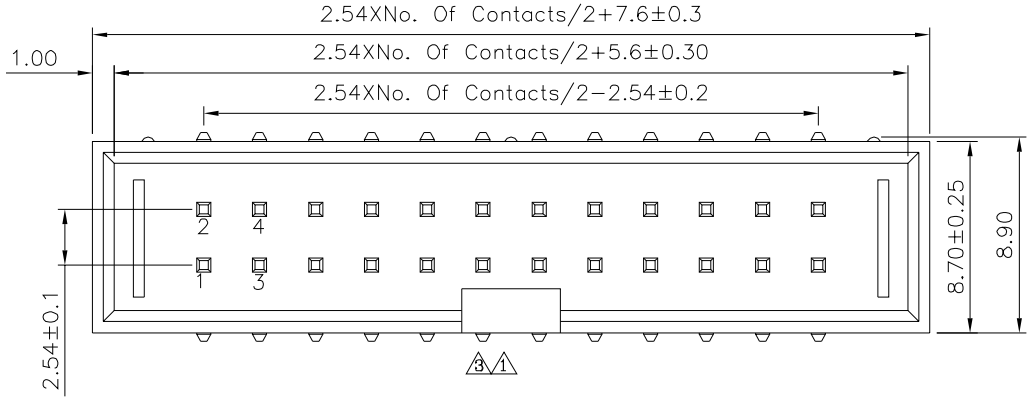

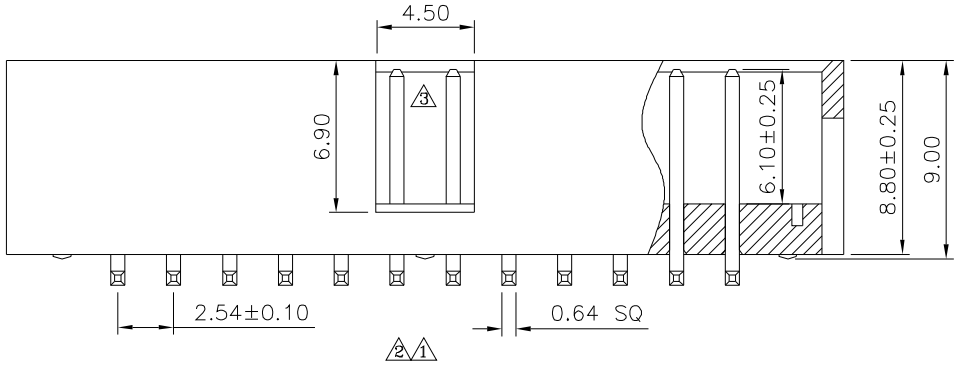

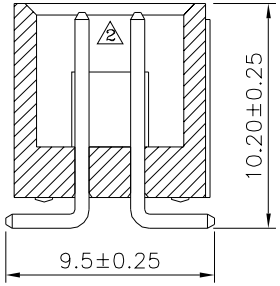

4UCON 元化興業股份有限公司 4UCON TECHNOLOGY INC.

DRAWING No.	APPROVED BY	EMILY
20240	CHECKED BY	HZF
	DRAWING BY	CYP
SCALE NONE	REV.	A3

UNLESS OTHERWISE SPECIFIED TOLERANCES ARE
X. ±0.25 1 X.° ±2°
.X ±0.20 .X° ±1.5°
.XX ±0.15 .XX° ±1°
.XXX ±0.10 .XXX° ±0.5°
UNIT mm

NO.	REV.	REVISIONS	CHK	DATE
3	A3	Modify Data	HZF	04/17/2015
2	A2	Modify Data	HZF	02/04/2015
1	A1	Modify Data	HZF	01/22/2015
0	A0	NEW RELEASE	HZF	12/20/2010