| File No. | 432EA06806 | SHEET | 1/1 |
|---|---|---|---|

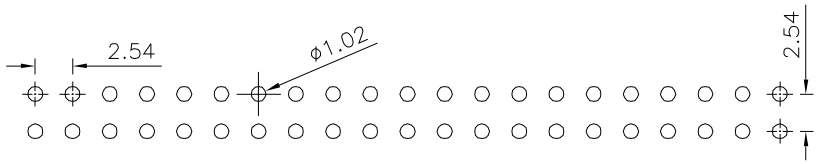


Recommended PCB Layout(Top Side)

(PCB Board Tolerance±0.05)

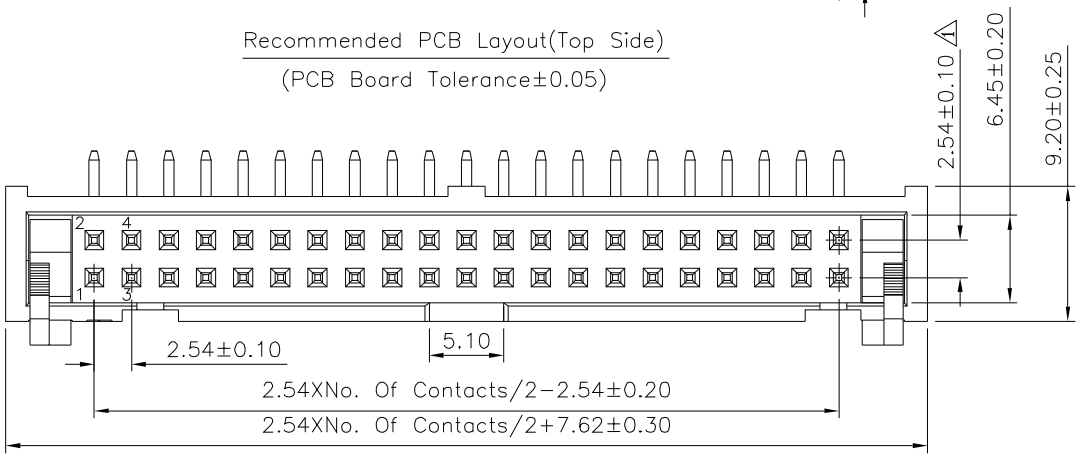


4 SPECIFICATION
Current Rating:3.0 Amp
Contact Resistance:20 Milliohms Max.
Insulation Resistance:1000 Megaohms Min.
Withstand Voltage:1000V AC/DC
Operation Temperature:−40°C~+105°C
Contact:Brass
Gold Flash Over All,Over Nickel
Latch:Zinc Alloy,Nickel Plated
Insulator:PBT+30%G.F.(UL94V−0),Black
2 Above 20 Poles With "E" Profile
RoHS Compliant

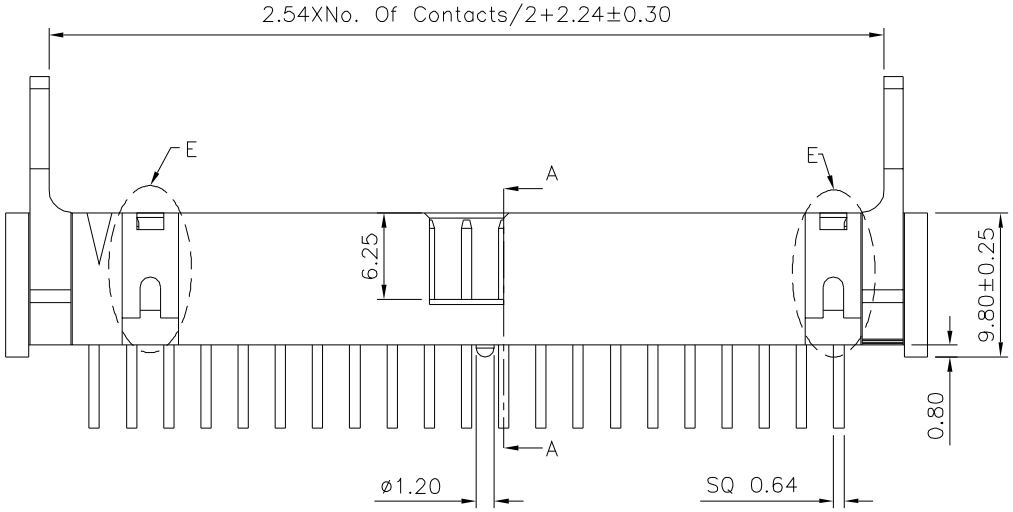


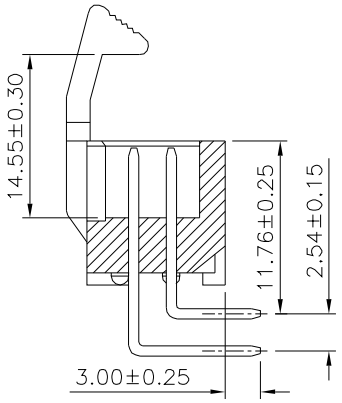


Section A−A

4UCON 元化興業股份有限公司 4UCON TECHNOLOGY INC.

| DRAWING No. 1 3 | APPROVED BY EMILY | UNLESS OTHERWISE SPECIFIED TOLERANCES ARE .X ±0.40 .XX ±0.25 .XXX ±0.15 ANG. ±3° |
|---|---|---|
| 19065 | CHECKED BY HZF | |
| | DRAWING BY YBL | |
| SCALE NONE | REV. A4 | UNIT mm |

| NO. | REV. | REVISIONS | CHK | DATE |
|---|---|---|---|---|
| 4 | A4 | Modify Data | HZF | 01/06/2014 |
| 3 | A3 | Modify Data | HZF | 05/14/2012 |
| 2 | A2 | Modify Data | HZF | 07/28/2009 |
| 1 | A1 | Modify Data | HZF | 07/03/2009 |
| 0 | A0 | NEW RELEASE | HZF | 11/06/2007 |