File No.	100QA14237	SHEET	1/1

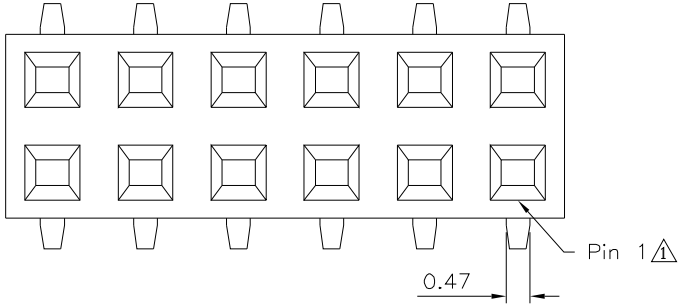

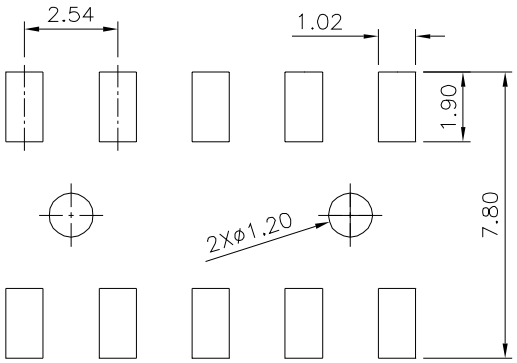

⚠1 Recommended P.C.B. Layout

⚠1 SPECIFICATION
Current Rating:3A
Insulation Resistance:1000 Megaohms Min.
Dielectric Withstanding:600V AC/DC
Contact Resistance:20 Milliohms Max.
Operation Temperature:−40°C~+105°C
⚠2 Contact:Phosphor Bronze,Gold Flash Over Nickel
⚠3 ⚠2 Insulator:PA6T(UL94V−0),Black
RoHS Compliant

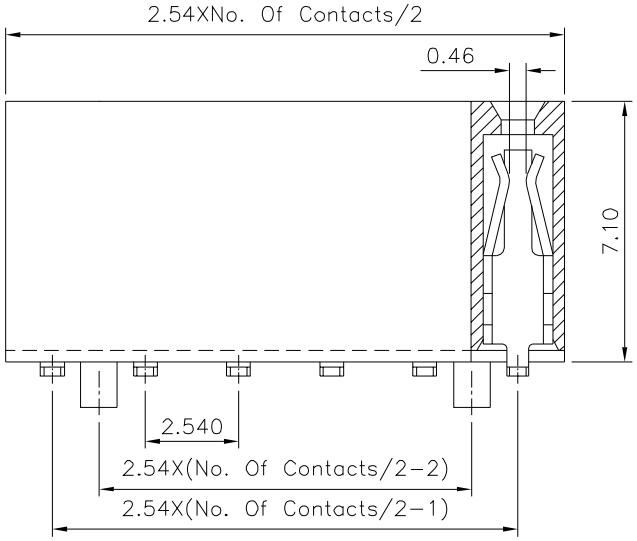

⚠1

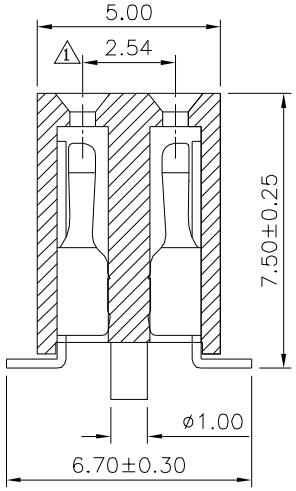

4UCON 元化興業股份有限公司 4UCON TECHNOLOGY INC.

DRAWING No.	APPROVED BY	EMILY	UNLESS OTHERWISE SPECIFIED TOLERANCES ARE
10711	CHECKED BY	HZF	X. ±0.50 .X ±0.35 .XX ±0.25 .XXX ±0.05
	DRAWING BY	YBL	
SCALE NONE	REV.	A3	UNIT mm

NO.	REV.	REVISIONS	CHK	DATE
⚠3	A3	Modify Data	HZF	01/14/2026
⚠2	A2	Modify Data	HZF	12/17/2013
⚠1	A1	Modify Data	HZF	06/23/2010
⚠0	A0	NEW RELEASE	HZF	12/27/2006