File No.	271NF09214	SHEET	1/1

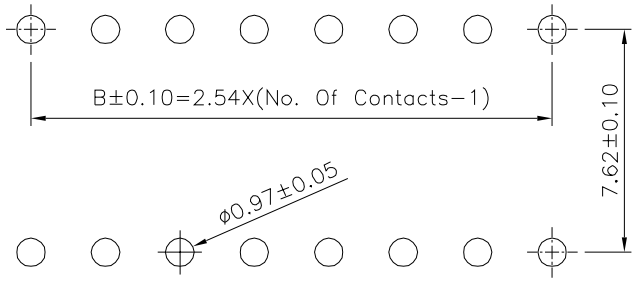

1 Recommended P.C.B. Layout

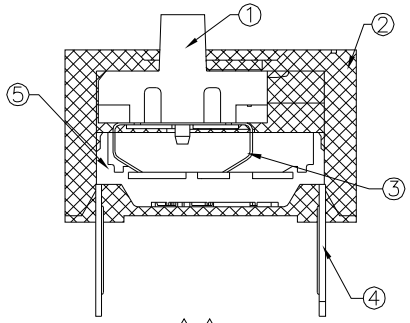

3 2

1 SPECIFICATION
Current Range:
Non−Switching:100mA 50V DC
Switching:25mA 24V DC
Withstanding Voltage:500V AC 50Hz Or 60Hz For 1 Minute
Contact Resistance:50 Milliohms Max.(Initial)
Insulation Resistance:100 Megaohms Min. At 500V DC,60s±5s
Operation Temperature Range:−40°C~+85°C
Operation Force:9.8N Max.
Switch Position:Off Type
RoHS Compliant

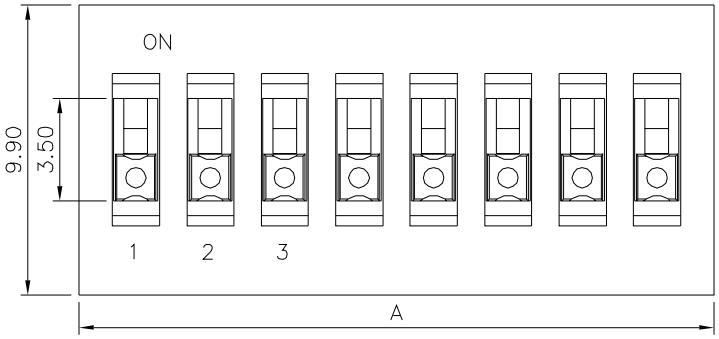

2 1

Pin	A	B
1	3.90	
2	6.44	2.54
3	8.98	5.08
4	11.52	7.62
5	14.06	10.16
6	16.60	12.70
7	19.14	15.24
8	21.68	17.78
9	24.22	20.32
10	26.76	22.86
12	31.84	27.94

1

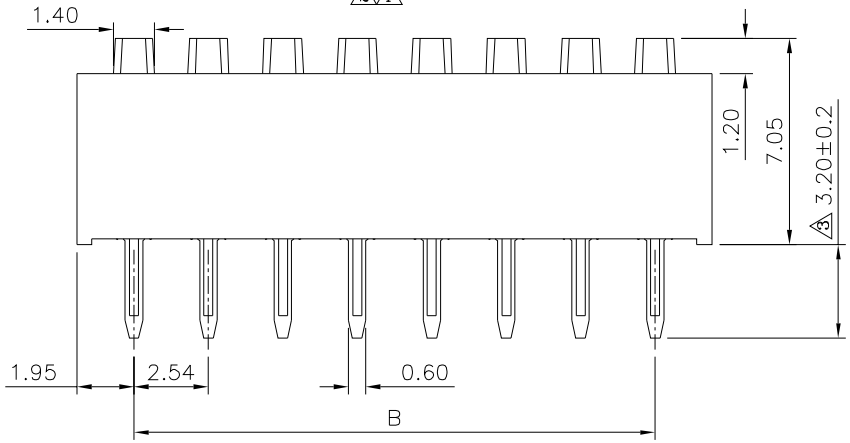

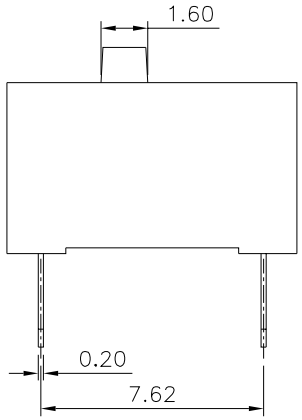

3 2 1

Schematic(Typ.)

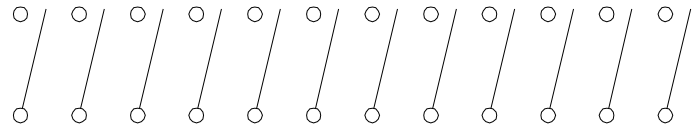

1 (1,2,3,4,5,6,7,8,9,10,12 Pos Avail)

No.	Description	Q'ty	Material	Remark
⑤	Base	1	PA66,UL94V−0	Black
1 ④	Terminal	−	Brass	Gold Plated Over Nickel
2 ③	Contact	−	Copper Alloy	Gold Plated Over Nickel
②	Cover	1	PBT,UL94V−0	Black
①	Actuator	−	PBT,UL94V−0	White

4UCON 元化興業股份有限公司 4UCON TECHNOLOGY INC.

DRAWING No. 1	APPROVED BY MEI	UNLESS OTHERWISE SPECIFIED TOLERANCES ARE
22768	CHECKED BY HZF	~10 ±0.10
	DRAWING BY CYP	10~ ±0.20
SCALE NONE	REV. B3	UNIT mm

NO.	REV.	REVISIONS	CHK	DATE
3	B3	Modify Data	HZF	06/09/2023
2	B2	Modify Data	HZF	07/10/2018
1	B1	Modify Data	HZF	05/12/2016
0	B0	NEW RELEASE	HZF	10/10/2013