File No.	034FF24217	SHEET	1/1

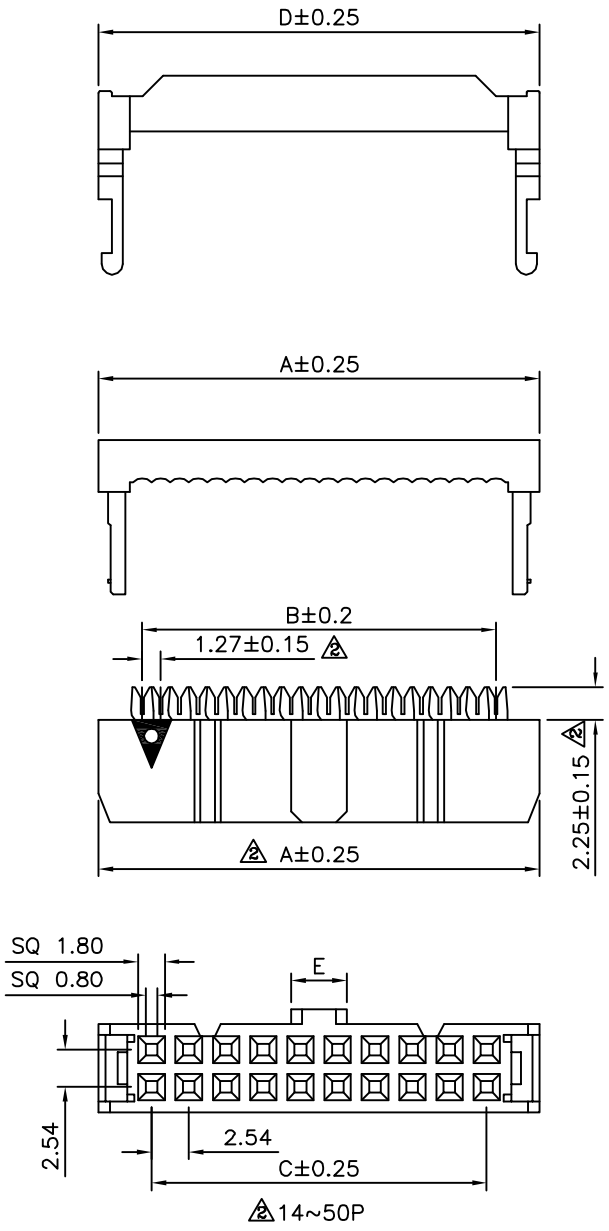

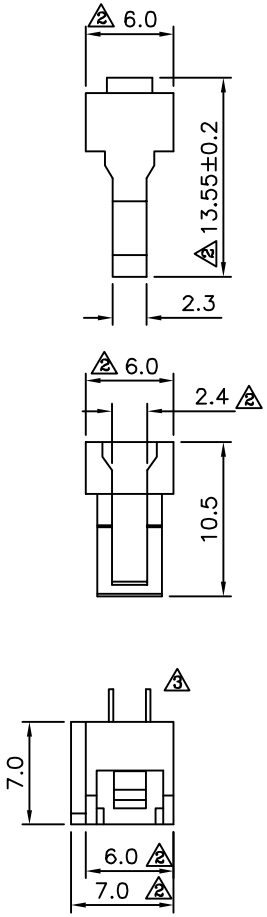

2 SPECIFICATION
Contact Resistance:1 Ohms Max.
Insulation Resistance:100 Megaohms Min. At DC 500V
Withstanding Voltage:500V AC For 1 Minute
Operation Temperature:−40°C~+105°C
Insulator:PBT+G.F.(UL94V−0),Black
3 Contact:Brass,Selective Gold Flash Over Nickel
RoHS Compliant

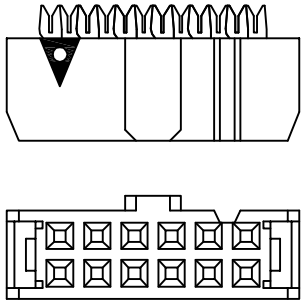

3 2 1

Pin	A	B	C	D	E
6	12.32	6.35	5.08	12.12	1.9
8	14.86	8.89	7.62	14.66	1.9
10	17.40	11.43	10.16	17.20	3.8
12	19.94	13.97	12.70	19.74	3.8
14	22.48	16.51	15.24	22.28	3.8
16	25.02	19.05	17.78	24.82	3.8
20	30.10	24.13	22.86	29.90	3.8
24	35.18	29.21	27.94	34.98	3.8
26	37.72	31.75	30.48	37.52	3.8
30	42.80	36.83	35.56	42.60	3.8
34	47.88	41.91	40.64	47.68	3.8
40	55.50	49.53	48.26	55.30	3.8
50	68.20	62.23	60.96	68.00	3.8

4UCON 元化興業股份有限公司 4UCON TECHNOLOGY INC.

DRAWING No.	APPROVED BY MEI	UNLESS OTHERWISE SPECIFIED TOLERANCES ARE
17503	CHECKED BY HZF	3 2 X. ±0.30 .X ±0.20 .XX ±0.10 .XXX ±0.05
	DRAWING BY CYP	
SCALE NONE	REV. B3	UNIT mm

NO.	REV.	REVISIONS	CHK	DATE
3	B3	Modify Data	HZF	06/24/2015
2	B2	Modify Data	HZF	09/24/2010
1	B1	Del Pin#60,Pin#64	HZF	11/28/2007
0	B0	NEW RELEASE	BECKY	04/04/2006