File No.	229NC16237	SHEET	1/1

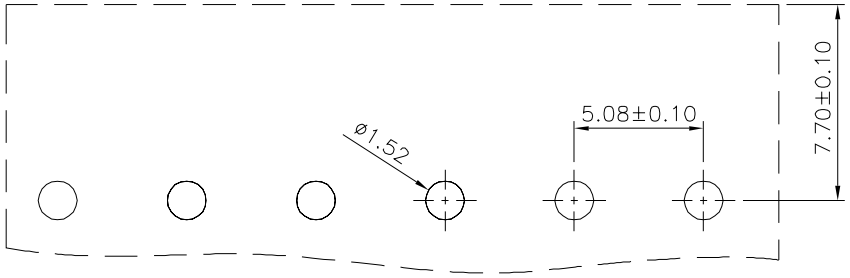

Recommended P.C.B. Layout

3 1 SPECIFICATION

Current:7.0A Max.
Voltage:250V Max.
Withstanding Voltage:1500V
Insulation Resistance:500K Megaohms Min.
Temperature Range:−40°C~+105°C
2 Housing:PA66(UL94V−2),White
2 Contact:Brass,Tin Plated Over Nickel
RoHS Compliant

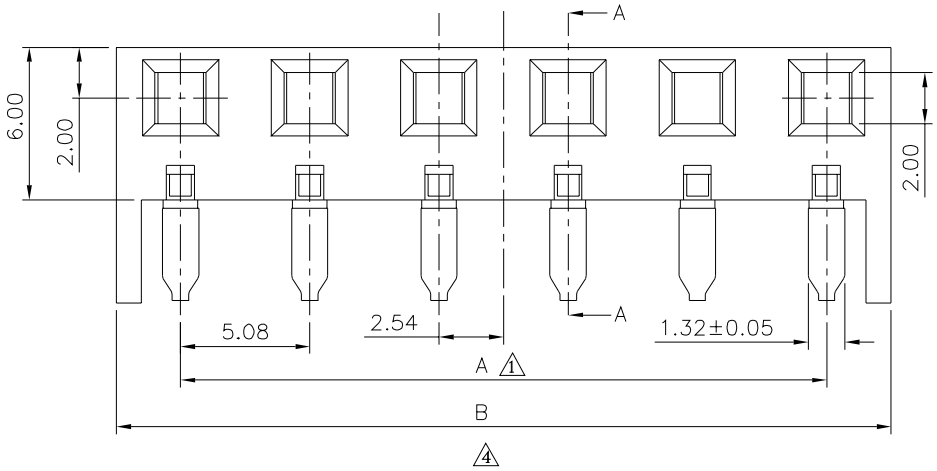

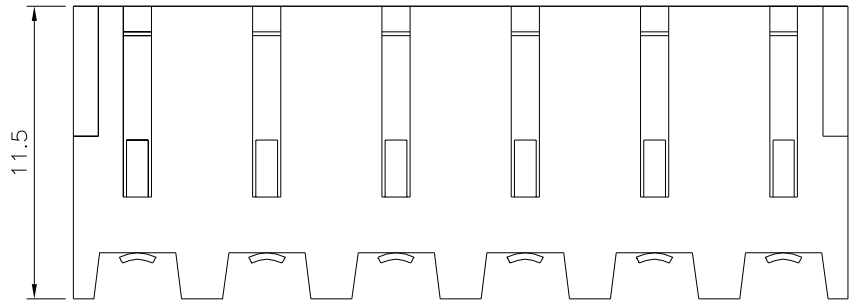

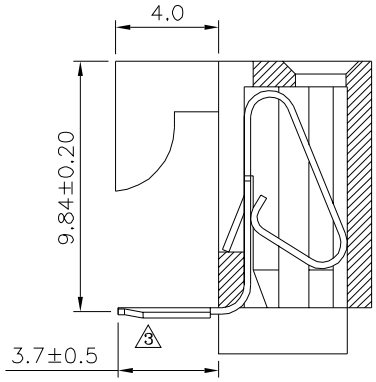

4 Section A−A

4 2 3

Pin	A	B
02	5.08±0.10	$10.16^{+0.05}_{+0.20}$
03	10.16±0.10	$15.24^{+0.05}_{+0.20}$
04	15.24±0.10	$20.32^{+0.10}_{+0.25}$
05	20.32±0.10	$25.40^{+0.10}_{+0.25}$
06	25.40±0.10	$30.48^{+0.10}_{+0.25}$
07	30.48±0.20	$35.56^{+0.10}_{+0.25}$
08	35.56±0.20	$40.64^{+0.20}_{+0.40}$
09	40.64±0.20	$45.72^{+0.20}_{+0.40}$
10	45.72±0.20	$50.80^{+0.20}_{+0.45}$
11	50.80±0.20	$55.88^{+0.20}_{+0.45}$
12	55.88±0.25	$60.96^{+0.50}_{+0.75}$
13	60.96±0.25	$66.04^{+0.50}_{+0.75}$
14	66.04±0.25	$71.12^{+0.50}_{+0.75}$
15	71.12±0.25	$76.20^{+0.50}_{+0.75}$
16	76.20±0.25	$81.28^{+0.50}_{+0.75}$
17	81.28±0.30	$86.36^{+0.50}_{+0.75}$
18	86.36±0.30	$91.44^{+0.50}_{+0.75}$
19	91.44±0.30	$96.52^{+0.50}_{+0.75}$
20	96.52±0.30	$101.60^{+0.50}_{+0.75}$

4UCON 元化興業股份有限公司
4UCON TECHNOLOGY INC.

DRAWING No.	APPROVED BY MEI	UNLESS OTHERWISE SPECIFIED TOLERANCES ARE
14967	CHECKED BY HZF	1 .X ±0.30 X.° ±1° .XX ±0.20 .X° ±0.5° .XXX ±0.10 .XX° ±0.25°
	DRAWING BY HAO	
SCALE NONE	REV. A4	UNIT mm

NO.	REV.	REVISIONS	CHK	DATE
4	A4	Modify Data	HZF	03/16/2023
3	A3	Modify Data	HZF	05/20/2015
2	A2	Modify Data	HZF	07/03/2013
1	A1	Modify Data	HZF	03/27/2009
0	A0	NEW RELEASE	BECKY	2004/06/07