File No.	392	SHEET	1 / 1

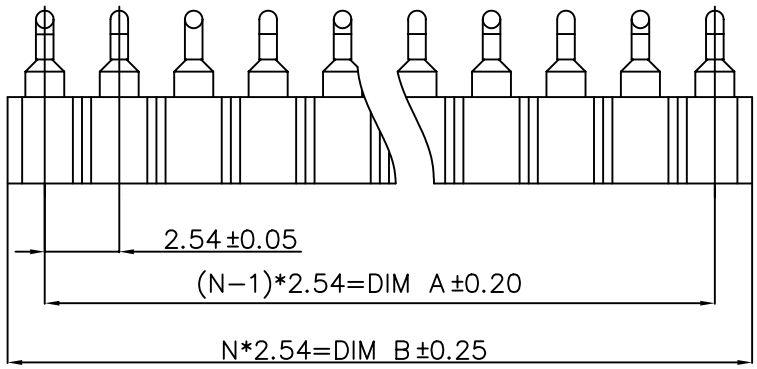

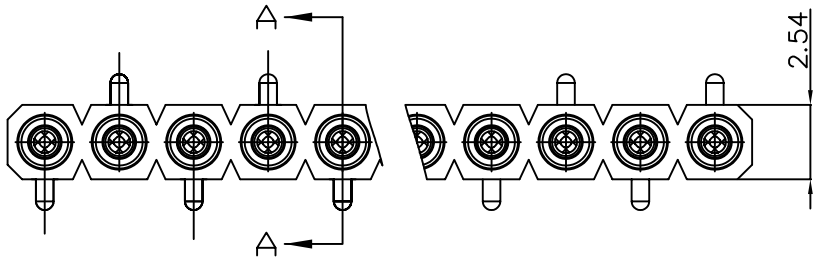

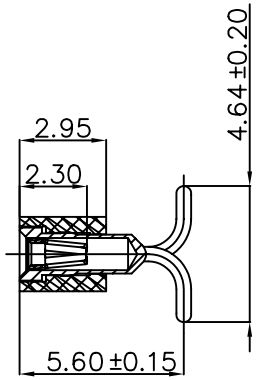

SECTION A-A

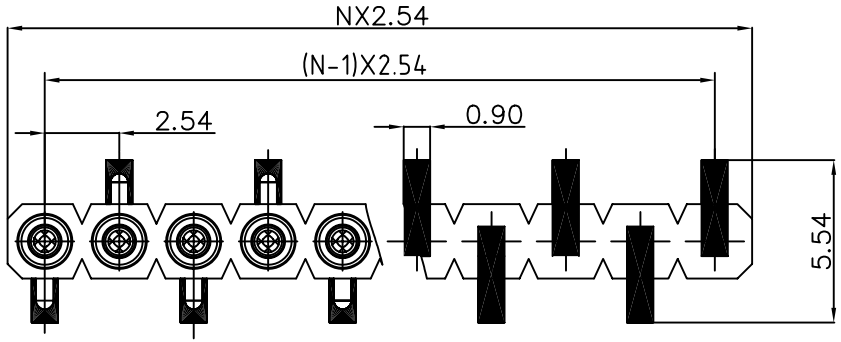

P.C.B LAYOUT

SPECIFICTIONS

Pin (outer sleeve) : Brass,machined, CuZn38Pb2
Clip(contact 4 finger):Beryllium copper,heat treated
Plating(outer sleeve) : Tin plated:2u"/80u" nickel,5u"/200u" Tin
Gold plated:2u'/80u" nickel,Full gold
Plating(contact):2u"/80u " nickel,gold or Tin plating
Insulator body(housing) : PPS(UL94V−0)

Current rating : 3 Amps/contact max.
Contact resistance :<4Milliohms /contact Max.
Insulation resistance: >1000Megohms at V=100V
Operating : 60 vac/DC

Operating temperature: Gold plated:−55°C to +125°C
(continuous) Tin plated:−40°C to +105°C
Average insertion force : <250g
with steel pin of ø0.43mm/0.017"
Average withdrawal :>50g
force with steel pin of ø0.43mm/0.017"
Mechanical life : min.200
Soldering temperture : +260°C, 10s Max.

4UCON 元化興業股份有限公司
4UCON TECHNOLOGY INC.

DRAWING No.	APPROVED BY MEI	UNLESS OTHERWISE SPECIFIED TOLERANCES ARE	NO.	REV.	REVISIONS	CHK	DATE
10220	CHECKED BY BECKY	.X ±0.30					
	DRAWING BY HZF	.XX ±0.10					
		ANG. ±1°	A0	A0	NEW RELEASE	MEI	
SCALE NONE	REV. A0	UNIT mm					