File No.	671LF04227	SHEET	1/1

4 3 SPECIFICATION
Current Rating;1A Max.
Voltage Rating:12V DC
Contacnt Resistance:30 Milliohms Max.
After Testing:100 Milliohms Max.
Insulation Resistance:100 Megaohms Min.
Withstanding Voltage:500V AC Min.
Insertion Force:3N−30N
Withdrawal Force:3N~30N
Durrability:500 Cycles
Temperature Rance:−20°C~60°C
RoHS Compliant

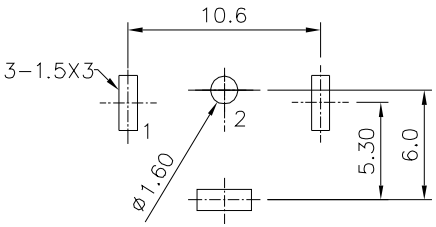

2 3 4 P.C.B. Layout(Top View)

Black	09602
Red	09603
White	09604
Yellow	09605

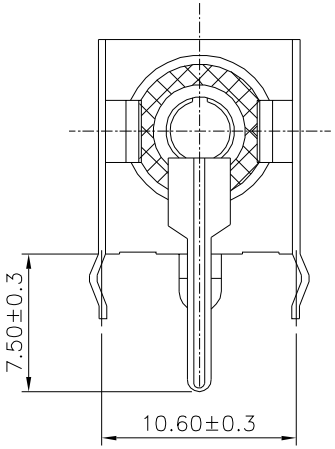

2 3 4

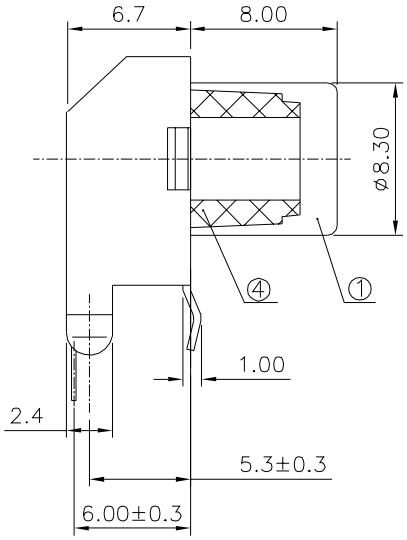

2 3 4

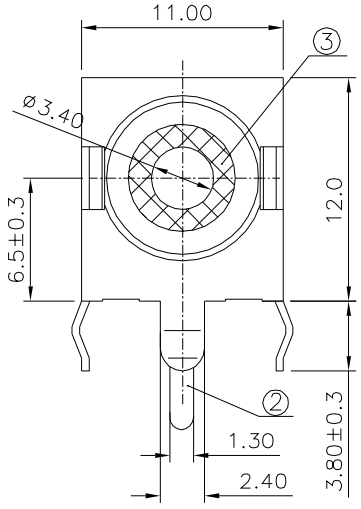

2 3 4

Schematic

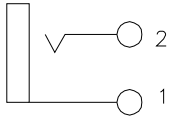

3

No.	Name	Material	Finish	Q'ty
①	Socket	Brass	CuSn Plated	1
②	Terminal	Brass	CuSn Plated	1
③	Washer	PC	————	1
④	Washer−1	PA66	Black	1

4 1

4UCON 元化興業股份有限公司 4UCON TECHNOLOGY INC.

DRAWING No.	APPROVED BY MEI	UNLESS OTHERWISE SPECIFIED TOLERANCES ARE L<4 ±0.2, 4<L≤16 ±0.3, 16<L≤63 ±0.4, 63<L ±0.5, ANG. ±5° 4
09605	CHECKED BY HZF	
	DRAWING BY CYP	
SCALE NONE	REV. A4	UNIT mm

NO.	REV.	REVISIONS	CHK	DATE
4	A4	Modify Data	HZF	06/04/2021
3	A3	Modify Data	HZF	12/28/2015
2	A2	Modify Data	HZF	08/09/2010
1	A1	Modify Data	HZF	11/05/2009
0	A0	NEW RELEASE	HZF	05/10/2008