File No.	191	SHEET	1/1

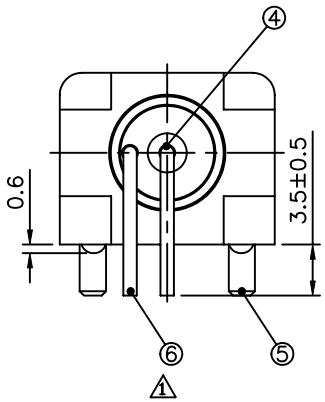

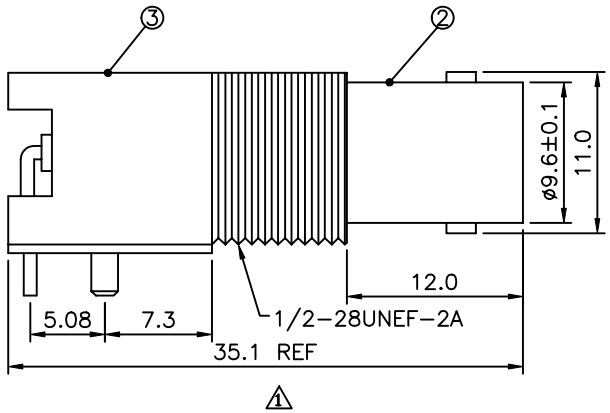

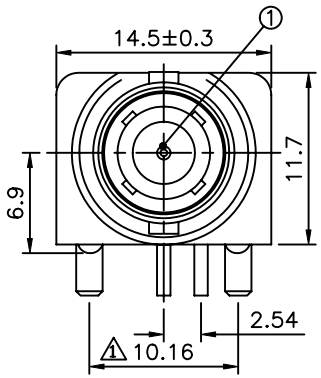

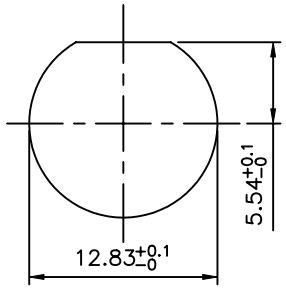

Recommended Mounting Hole
Maximum Panel Thickness:5.5mm

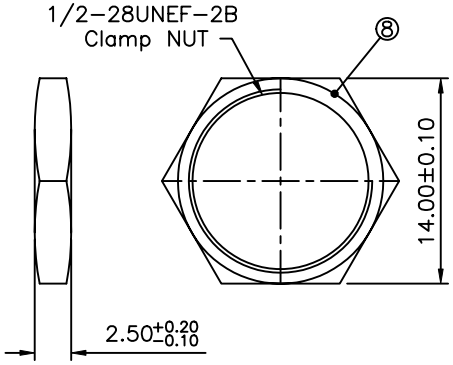

Nut 1

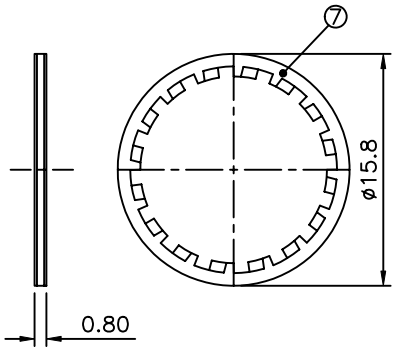

Washer 1

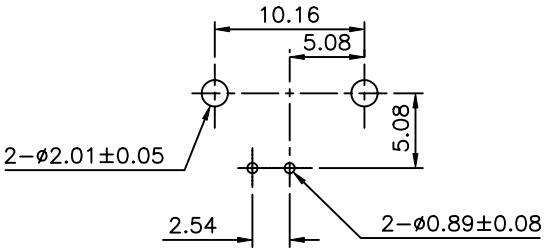

Recommended P.C.B. Layout

1 RoHS Compliant

Item No.	Description	Material	Remark
①	Center Contact	Phosphor Bronze	Gold Plated
②	Body	Zinc Alloy	Nickel Plated
③	Housing	PBT	UL94V−0
④	Insulator	PE−606	White
⑤	Mounting Post	Bronze	Tin Plated
⑥	Solder Tall	Copper Wire	Tin Plated
⑦	Washer	Steel	Nickel Plated
⑧	Nut	Brass	NickelPlated

4UCON 元化興業股份有限公司
4UCON TECHNOLOGY INC.

DRAWING No.	APPROVED BY	MEI	UNLESS OTHERWISE SPECIFIED TOLERANCES ARE X. ±0.5 .X ±0.3 .XX ±0.2 ANG.
08884	CHECKED BY	HZF	
	DRAWING BY	WZL	
SCALE NONE	REV.	A1	UNIT mm

NO.	REV.	REVISIONS	CHK	DATE
1	A1	Modify Data	HZF	12/25/2009
0	A0	NEW RELEASE	BECKY	12/06/2005