File No.	561PC12001	SHEET	1/1

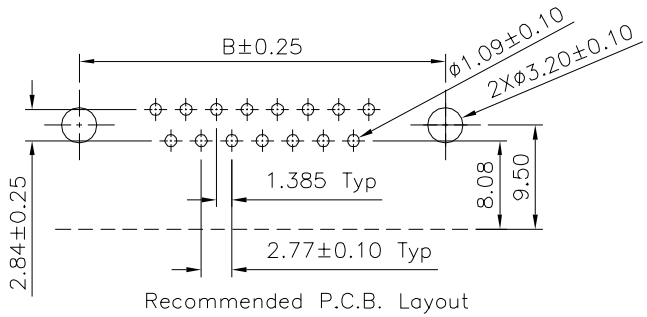

Recommended P.C.B. Layout

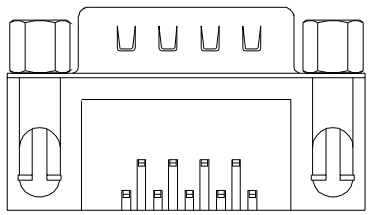

9&37Pin

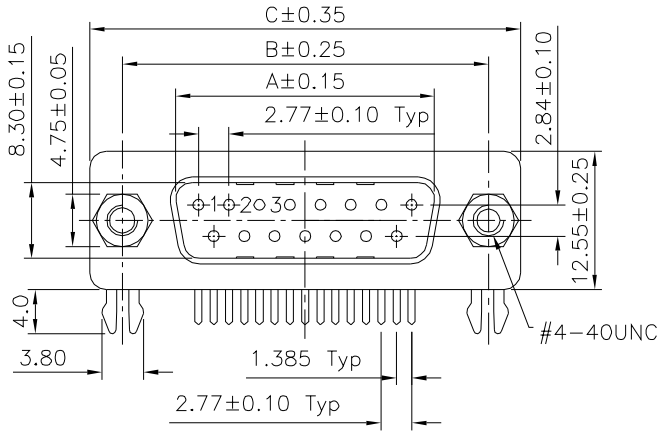

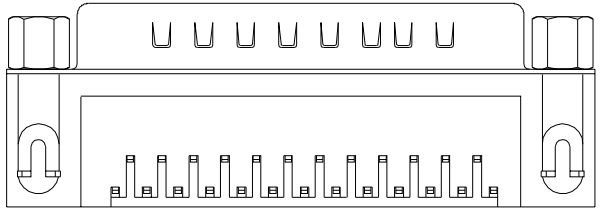

25Pin

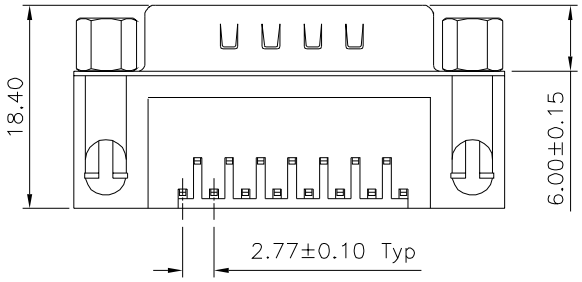

15Pin

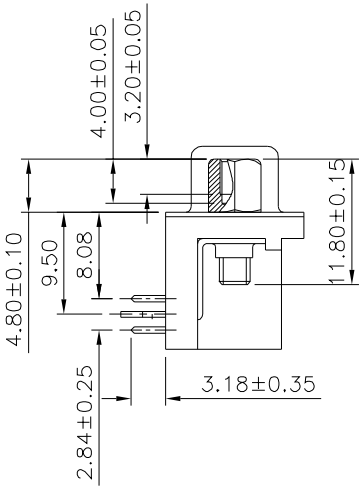

SPECIFICATION

Current Rating:1A
Voltage Rating:250V AC
Withstanding Voltance:500V(One Minute)
Contact Resistance:30 Milliohms Max.
Insulation Resistance:1000 Megaohms Min. At 500V DC
Operating Temperature:−55°C~+105°C
Shell:Steel,Nickel Plated
Insulator:PBT+30%G.F.(UL94V−0),Black
Contact:Brass,Gold Flash On Contact Area, Tin Plated On Solder Tails,Over Nickel
Z Flake:Steel,Tin Plated
Screw:Steel,Nickel Plated
RoHS Compliant

Pin	A	B	C
09	16.92	24.99	30.81
15	25.25	33.32	39.20
25	38.96	47.04	53.04
37	55.42	63.50	69.40

4UCON 元化興業股份有限公司 4UCON TECHNOLOGY INC.

DRAWING No.	APPROVED BY MEI	UNLESS OTHERWISE SPECIFIED TOLERANCES ARE 1
02816	CHECKED BY HZF	.X ±0.38 .X° ±3° .XX ±0.25 .XX° ±1° .XXX ±0.10 .XXX° ±0.5°
	DRAWING BY SONG	
SCALE NONE	REV. C1	UNIT mm

NO.	REV.	REVISIONS	CHK	DATE
1	C1	Modify Data	HZF	03/12/2025
0	C0	NEW RELEASE	HZF	05/25/2022